Gospodarska zbornica Slovenije

e-SLOG 2.0

Elektronski račun

Oktober 2018

Slovenska različica

e-SLOG 2.0 Elektronski račun – 2. del: Sestava dokumenta

READINESS OF SLOVENIAN E-INVOICING ROSE

Co-financed by the European Union
Connecting Europe Facility

Pravice in stiki

e-SLOG je blagovna znamka Gospodarske zbornice Slovenije. Dokumentacijo e-SLOG 2.0 Elektronski račun je pripravila delovna skupina ukrepa ROSE "Readiness Of Slovenian e-Invoicing" št. 2016-SI-IA-0103, ki je sofinanciran preko Instrumenta za povezovanje Evrope (CEF). Dokumentacija je pripravljena kot mejnik št. 2 "Manual for eSLOG 2.0 ready" vezan na aktivnost 1 "Upgrade of the Slovenian national eInvoicing standard eSlog 1.6 to 2.0". Za to publikacijo je odgovoren izključno avtor. Evropska unija ne odgovarja za kakršnokoli morebitno uporabo v njej navedenih informacij.

Dokumentacija e-SLOG 2.0 Elektronski račun je objavljena na naslovu http://www.roseslovenia.eu/.

Uporabnikom je dovoljena uporaba vsega objavljenega gradiva za namene elektronskega poslovanja. Uporaba je brezplačna. Spreminjanje vsebine shem ni dovoljeno.

Gospodarska zbornica Slovenije in partnerji, ki so sodelovali v delovni skupini ukrepa ROSE za pripravo standarda e-SLOG 2.0, ne prevzemajo neposredne ali posredne odgovornosti za morebitno škodo, ki bi nastala pri uporabi standarda e-SLOG 2.0.

Člani delovne skupine za pripravo dokumentacije e-SLOG 2.0 Elektronski račun:

Dušan Zupančič (GZS), Alan Ružič (ZZI), Rok Bojanc (ZZI), Tomaž Močnik (ZZI), Jorgo Bertalanič (UJP), Rok Bojkovič (Mojdenar IT).

Naslovi za stik:

Gospodarska zbornica Slovenije
Dimičeva 13
1504 Ljubljana
Telefonska št.: (01) 58 98 000
E-naslov: epp@gzs.si
Splet: https://e-slog.gzs.si

ZZI, d. o. o.
Pot k sejmišču 33
1231 Ljubljana Črnuče
Telefonska št.: (01) 53 03 300
E-naslov: info@zzi.si
Splet: https://www.zzi.si

Uprava Republike Slovenije za javna plačila
Dunajska cesta 48
1000 Ljubljana
Telefonska št.: (01) 47 51 651
E-naslov: ujp@ujp.gov.si
Splet: http://www.ujp.gov.si

Mojdenar IT, d. o. o.
Vurnikova ulica 2
1000 Ljubljana
Telefonska št.: (01) 43 02 210
E-naslov: info@mojdenar.com
Splet: http://www.mojdenar.si

Kazalo

Predgovor 4
Uvod 5
1 Področje uporabe 6
2 Zveze s standardi 6
3 Izrazi in definicije 6
4 Sestava sporočila 6
5 Razvejitveni diagram 11
6 Podatki o segmentu 27
7 Zbirni račun 182
7.1 Podatki dobav in naročil na nivoju glave računa 182
7.2 Podatki dobav in naročil na nivoju postavke računa 185
Dodatek A (informativni) Poslovni termini (BT) 187
A.1 Seznam in opis poslovnih terminov (BT) in skupin poslovnih terminov (BG) 187
Dodatek B (informativni) Shema e-SLOG 2.0 206
B.1 Shema .XML 206
Dodatek C (informativni) Demonstracijski primer uporabe 207
C.1 Primer uporabe elementov segmenta 207
Dodatek D (informativni) Mapirna tabela e-SLOG 1.6 208
D.1 Mapirna tabela med standardom e-SLOG 1.6 in e-SLOG 2.0 208
Literatura 209

Predgovor

Dokumentacijo e-SLOG 2.0 Elektronski račun je pripravila delovna skupina ukrepa ROSE "Readiness Of Slovenian e-Invoicing".

Ta dokument je del skupine dokumentov, sestavljeni iz:

- e-SLOG 2.0 Elektronski račun – 1. del: Splošna navodila
- e-SLOG 2.0 Elektronski račun – 2. del: Sestava dokumenta
- e-SLOG 2.0 Elektronski račun – 3. del: Primeri uporabe

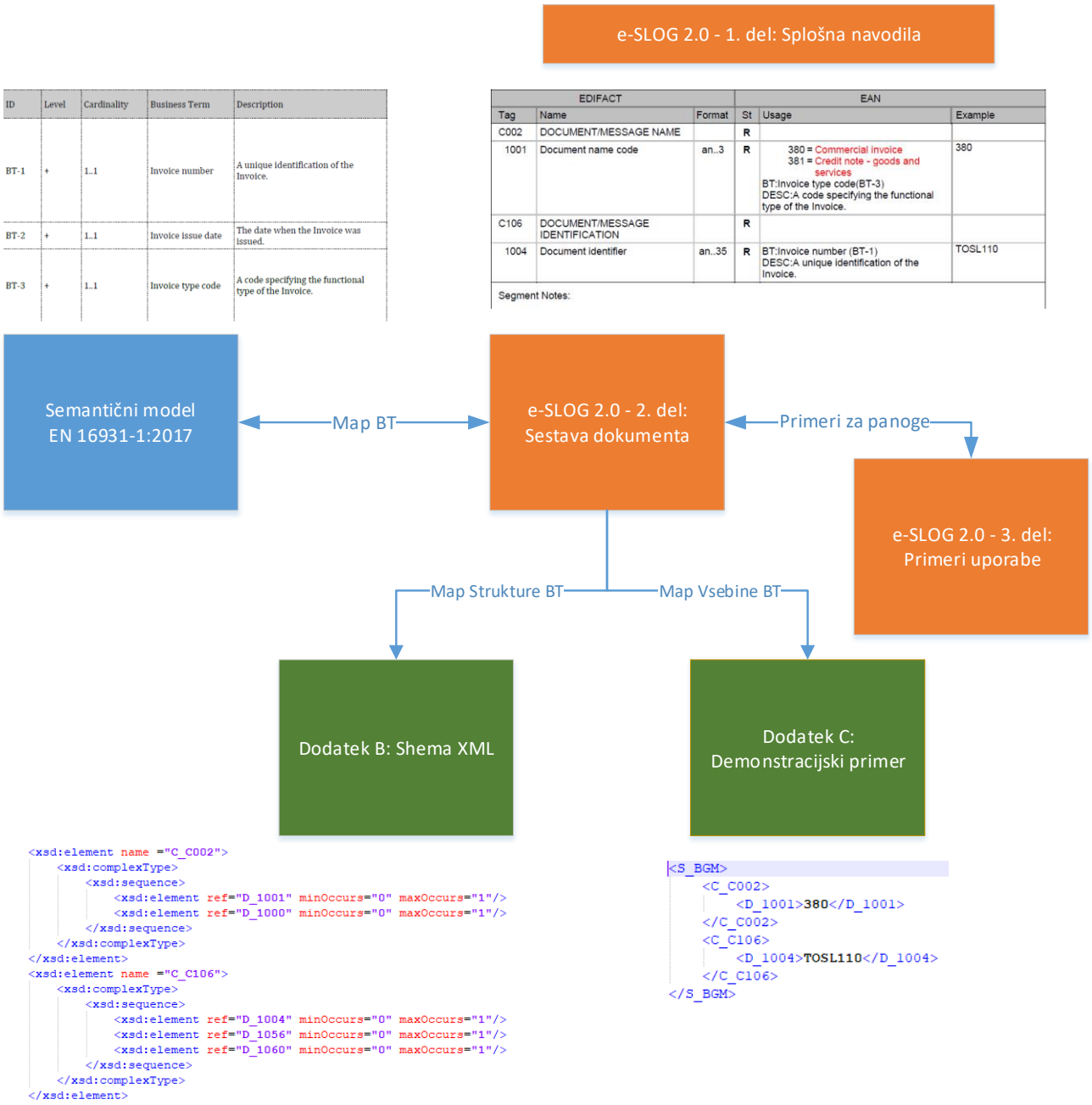

Slika 1: Povezava med dokumenti e-SLOG 2.0 Elektronski račun

Uvod

Evropski parlament in Svet sta 6. maja 2014 sprejela Direktivo 2014/55/EU o vzpostavitvi evropskega standarda za eRačun EN 16931. Evropski standard je bil v Uradnem listu Evropske unije objavljen 17. oktobra 2017.

Za uveljavitev evropskega standarda za eRačun v Sloveniji v javnem sektorju in gospodarstvu je bil vzpostavljen ukrep ROSE "Readiness Of Slovenian E-invoicing". Eden izmed osnovnih ciljev ukrepa je nadgradnja standarda e-SLOG na različico 2.0, ki je skladna z evropskim standardom. Pri pripravi standarda e-SLOG 2.0 je bila kot osnova uporabljena sintaksa UN/EDIFACT INVOIC, ki je bila osnova tudi pri pripravi prejšnjih različic standarda e-SLOG.

Interoperabilnost med starim standardom e-SLOG 1.6 in novim standardom e-SLOG 2.0 zagotavljajo mapirne tabele, ki omogočajo preslikavo med obema standardoma. Mapirne tabele so v prilogi D dokumenta *e-SLOG 2.0 Elektronski račun – 2. del: Sestava dokumenta*.

Različica dokumentacije e-SLOG 2.0 oktober 2018 vsebuje nacionalne razširitve. Nacionalne razširitve je pripravila delovna skupina za e-SLOG na Gospodarski zbornici Slovenije.

1 Področje uporabe

Namen dokumenta je opredeliti sestavo dokumenta e-SLOG 2.0 – Elektronski račun in povezavo posameznih segmentov dokumenta s semantičnim modelom opisanim v SIST EN 16931-1:2017 [2]. Namenjen je vsem pravnim in javnim osebam, ki standard e-SLOG 2.0 – Elektronski račun vključujejo v programske rešitve.

2 Zveze s standardi

Za uporabo tega standarda so, delno ali v celoti, nujno potrebni spodaj navedeni dokumenti. Pri datiranih sklicevanjih se uporablja le navedena izdaja. Pri nedatiranih sklicevanjih se uporablja zadnja izdaja publikacije (vključno z dopolnili).

SIST EN 16931-1:2017, Elektronsko izdajanje računov -1. del: Semantični podatkovni model ključnih elementov za elektronski račun

3 Izrazi in definicije

V tem dokumentu se uporabljajo izrazi in definicije iz *e-SLOG 2.0 Elektronski račun – 1. del: Splošna navodila*.

Dodatek A vsebuje seznam in opis poslovnih terminov.

4 Sestava sporočila

Sporočilo je sestavljeno po segmentih. Prikaz sestave sporočila je obrazložen v *e-SLOG 2.0 Elektronski račun – 1. del: Splošna navodila*, poglavje 8.3.1. Vsak segment je opredeljen z oznako segmenta, zaporedno številko v dokumentaciji, obveznostjo zapisa[1], s številom ponovitev, z imenom segmenta in medsebojno relacijo.

UNH	1	M	1	- Message header
BGM	2	M	1	- Beginning of message
DTM	3	M	1	- Date/time/period
DTM	4	C	1	- Date/time/period
DTM	5	C	1	- Date/time/period
DTM	6	C	1	- Date/time/period
DTM	7	C	1	- Date/time/period
DTM	8	C	1	- Date/time/period
FTX	9	C	1	- Free text
FTX	10	C	1	- Free text
FTX	11	C	99	- Free text
FTX	12	M	1	- Free text
FTX	13	C	1	- Free text
FTX	14	C	1	- Free text
FTX	15	C	1	- Free text
FTX	16	C	1	- Free text
SG1		C	1	- RFF
RFF	17	M	1	- Reference
SG1		C	1	- RFF
RFF	18	M	1	- Reference
SG1		C	1	- RFF
RFF	19	M	1	- Reference

[1] Zapis obveznosti zapisa je opredeljen v e-SLOG 2.0 Elektronski račun – 1. del: Splošna navodila, poglavje 8.2.

SG1		C	1	- RFF
RFF	20	M	1	- Reference
SG1		C	1	- RFF
RFF	21	M	1	- Reference
SG1		C	1	- RFF
RFF	22	M	1	- Reference
SG1		C	1	- RFF
RFF	23	M	1	- Reference
SG1		C	1	- RFF
RFF	24	M	1	- Reference
SG1		C	99999	- RFF-DTM
RFF	25	M	1	- Reference
DTM	26	C	1	- Date/time/period
SG1		C	1	- RFF
RFF	27	M	1	- Reference
SG2		R	1	- NAD-FII-FII-FII-SG3-SG3-SG3-SG3-SG3-SG3-SG3-SG5-SG5
NAD	28	M	1	- Name and address
FII	29	C	1	- Financial institution information
FII	30	C	1	- Financial institution information
FII	31	C	1	- Financial institution information
SG3		C	1	- RFF
RFF	32	M	1	- Reference
SG3		C	1	- RFF
RFF	33	M	1	- Reference
SG3		C	1	- RFF
RFF	34	M	1	- Reference
SG3		C	1	- RFF
RFF	35	M	1	- Reference
SG3		R	1	- RFF
RFF	36	M	1	- Reference
SG3		C	1	- RFF
RFF	37	M	1	- Reference
SG3		C	1	- RFF
RFF	38	M	1	- Reference
SG5		C	1	- CTA-COM
CTA	39	M	1	- Contact information
COM	40	C	1	- Communication contact
SG5		C	1	- CTA-COM-COM
CTA	41	M	1	- Contact information
COM	42	C	1	- Communication contact
COM	43	C	1	- Communication contact
SG2		R	1	- NAD-FII-SG3-SG3-SG3-SG5-SG5
NAD	44	M	1	- Name and address
FII	45	C	1	- Financial institution information
SG3		C	1	- RFF
RFF	46	M	1	- Reference
SG3		C	1	- RFF
RFF	47	M	1	- Reference
SG3		R	1	- RFF
RFF	48	M	1	- Reference
SG5		C	1	- CTA-COM
CTA	49	M	1	- Contact information
COM	50	C	5	- Communication contact
SG5		C	1	- CTA-COM-COM
CTA	51	M	1	- Contact information
COM	52	C	1	- Communication contact
COM	53	C	1	- Communication contact
SG2		C	1	- NAD-SG3
NAD	54	M	1	- Name and address
SG3		C	1	- RFF

RFF	55	M	1	- Reference
SG2		C	1	- NAD
NAD	56	M	1	- Name and address
SG2		C	1	- NAD-SG3
NAD	57	M	1	- Name and address
SG3		R	1	- RFF
RFF	58	M	1	- Reference
SG7		R	1	- CUX
CUX	59	M	1	- Currencies
SG7		C	1	- CUX
CUX	60	M	1	- Currencies
SG8		C	1	- PAT-DTM-PAI
PAT	61	M	1	- Payment terms basis
DTM	62	C	1	- Date/time/period
PAI	63	R	1	- Payment instructions
SG16		C	9999	- ALC-SG19-SG20-SG20-SG22
ALC	64	M	1	- Allowance or charge
SG19		C	1	- PCD
PCD	65	M	1	- Percentage details
SG20		R	1	- MOA
MOA	66	M	1	- Monetary amount
SG20		C	1	- MOA
MOA	67	M	1	- Monetary amount
SG22		C	1	- TAX
TAX	68	M	1	- Duty/tax/fee details
SG16		C	9999	- ALC-SG19-SG20-SG20-SG22
ALC	69	M	1	- Allowance or charge
SG19		C	1	- PCD
PCD	70	M	1	- Percentage details
SG20		R	1	- MOA
MOA	71	M	1	- Monetary amount
SG20		C	1	- MOA
MOA	72	M	1	- Monetary amount
SG22		C	5	- TAX
TAX	73	M	1	- Duty/tax/fee details
SG26		R	9999999	- LIN-PIA-PIA-PIA-IMD-IMD-QTY-ALI-DTM-DTM-FTX-FTX-SG27-SG27-SG29-SG29-SG30-SG30-SG30-SG34-SG39-SG39-SG39
LIN	74	M	1	- Line item
PIA	75	C	1	- Additional product id
PIA	76	C	1	- Additional product id
PIA	77	C	25	- Additional product id
IMD	78	R	1	- Item description
IMD	79	C	1	- Item description
QTY	80	R	1	- Quantity
ALI	81	C	1	- Additional information
DTM	82	C	1	- Date/time/period
DTM	83	C	1	- Date/time/period
FTX	84	C	1	- Free text
FTX	85	C	99	- Free text
SG27		R	1	- MOA
MOA	86	M	1	- Monetary amount
SG27		C	1	- MOA
MOA	87	M	1	- Monetary amount
SG29		R	1	- PRI
PRI	88	M	1	- Price details
SG29		C	1	- PRI
PRI	89	M	1	- Price details
SG30		C	1	- RFF
RFF	90	M	1	- Reference
SG30		C	1	- RFF

RFF	91	M	1	- Reference
SG30		C	1	- RFF
RFF	92	M	1	- Reference
SG34		R	1	- TAX-MOA-MOA
TAX	93	M	1	- Duty/tax/fee details
MOA	94	C	2	- Monetary amount
MOA	95	C	2	- Monetary amount
SG39		C	30	- ALC-SG41-SG42-SG42
ALC	96	M	1	- Allowance or charge
SG41		C	1	- PCD
PCD	97	M	1	- Percentage details
SG42		R	2	- MOA
MOA	98	M	1	- Monetary amount
SG42		C	2	- MOA
MOA	99	M	1	- Monetary amount
SG39		C	30	- ALC-SG42
ALC	100	M	1	- Allowance or charge
SG42		C	1	- MOA
MOA	101	M	1	- Monetary amount
SG39		C	30	- ALC-SG41-SG42-SG42
ALC	102	M	1	- Allowance or charge
SG41		C	1	- PCD
PCD	103	M	1	- Percentage details
SG42		R	2	- MOA
MOA	104	M	1	- Monetary amount
SG42		C	2	- MOA
MOA	105	M	1	- Monetary amount
SG26		C	9999999	- LIN-PIA-IMD-IMD-QTY-ALI-DTM-DTM-FTX-SG27-SG27-SG29-SG30-SG30-SG30-SG34
LIN	106	M	1	- Line item
PIA	107	C	1	- Additional product id
IMD	108	R	1	- Item description
IMD	109	C	1	- Item description
QTY	110	R	1	- Quantity
ALI	111	C	1	- Additional information
DTM	112	C	1	- Date/time/period
DTM	113	C	1	- Date/time/period
FTX	114	C	1	- Free text
SG27		R	1	- MOA
MOA	115	M	1	- Monetary amount
SG27		R	1	- MOA
MOA	116	M	1	- Monetary amount
SG29		R	1	- PRI
PRI	117	M	1	- Price details
SG30		C	1	- RFF
RFF	118	M	1	- Reference
SG30		C	1	- RFF
RFF	119	M	1	- Reference
SG30		C	1	- RFF
RFF	120	M	1	- Reference
SG34		R	1	- TAX-MOA-MOA
TAX	121	M	1	- Duty/tax/fee details
MOA	122	C	2	- Monetary amount
MOA	123	C	2	- Monetary amount
SG26		C	9999999	- LIN-PIA-IMD-QTY-SG27-SG27-SG29-SG34
LIN	124	M	1	- Line item
PIA	125	C	1	- Additional product id
IMD	126	R	1	- Item description
QTY	127	R	1	- Quantity
SG27		R	99	- MOA

MOA	128	M	1	- Monetary amount
SG27		R	1	- MOA
MOA	129	M	1	- Monetary amount
SG29		R	1	- PRI
PRI	130	M	1	- Price details
SG34		R	1	- TAX-MOA-MOA
TAX	131	M	1	- Duty/tax/fee details
MOA	132	C	2	- Monetary amount
MOA	133	C	2	- Monetary amount
UNS	134	C	1	- Section control
SG50		M	1	- MOA
MOA	135	M	1	- Monetary amount
SG50		M	1	- MOA
MOA	136	M	1	- Monetary amount
SG50		M	1	- MOA
MOA	137	M	1	- Monetary amount
SG50		M	1	- MOA
MOA	138	M	1	- Monetary amount
SG50		C	1	- MOA
MOA	139	M	1	- Monetary amount
SG50		C	1	- MOA
MOA	140	M	1	- Monetary amount
SG50		C	1	- MOA
MOA	141	M	1	- Monetary amount
SG50		C	1	- MOA
MOA	142	M	1	- Monetary amount
SG50		C	1	- MOA
MOA	143	M	1	- Monetary amount
SG50		C	1	- MOA
MOA	144	M	1	- Monetary amount
SG52		R	10	- TAX-MOA-MOA
TAX	145	M	1	- Duty/tax/fee details
MOA	146	R	1	- Monetary amount
MOA	147	R	1	- Monetary amount
SG52		R	10	- TAX-MOA-MOA
TAX	148	M	1	- Duty/tax/fee details
MOA	149	R	1	- Monetary amount
MOA	150	R	1	- Monetary amount
UNT	151	C	1	- Message trailer

5 Razvejitveni diagram

Razvejitveni diagram predstavlja hierarhični prikaz segmentov. Prikazane informacije so opisane v *e-SLOG 2.0 Elektronski račun – 1. del: Splošna navodila*, poglavje 8.3.2.

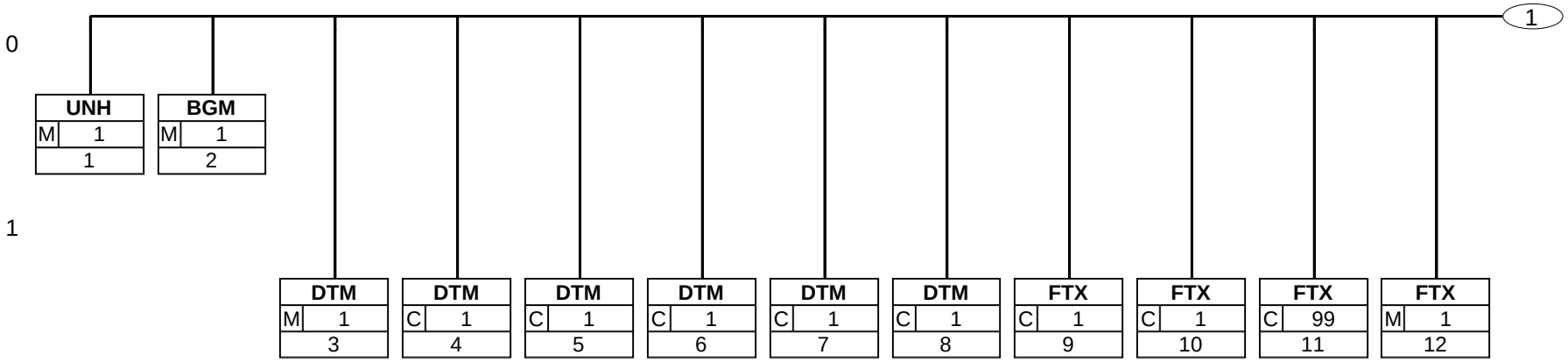

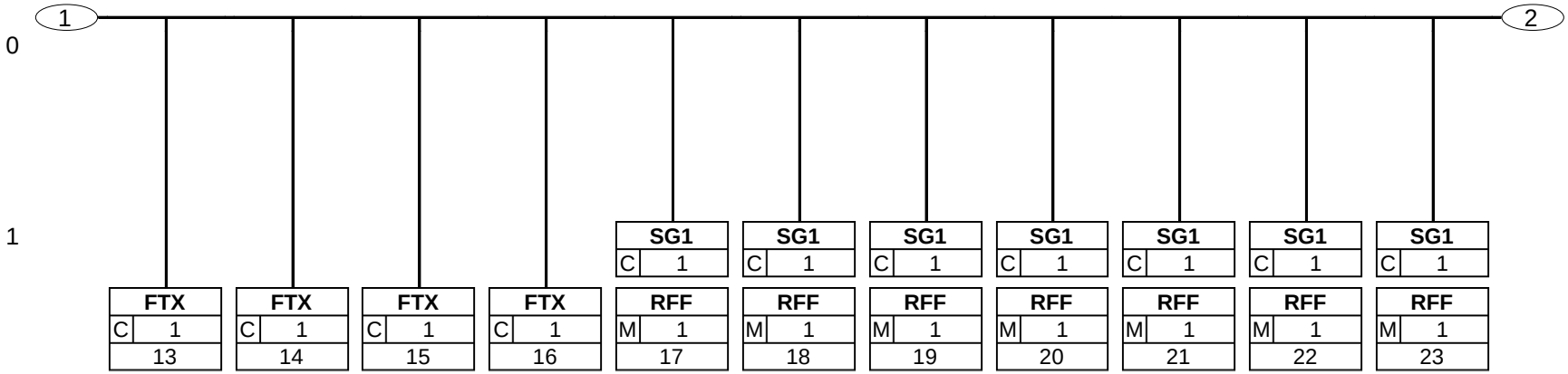
1
2
0
1
FTX C 1 13
FTX C 1 14
FTX C 1 15
FTX C 1 16
SG1 C 1
RFF M 1 17
SG1 C 1
RFF M 1 18
SG1 C 1
RFF M 1 19
SG1 C 1
RFF M 1 20
SG1 C 1
RFF M 1 21
SG1 C 1
RFF M 1 22
SG1 C 1
RFF M 1 23

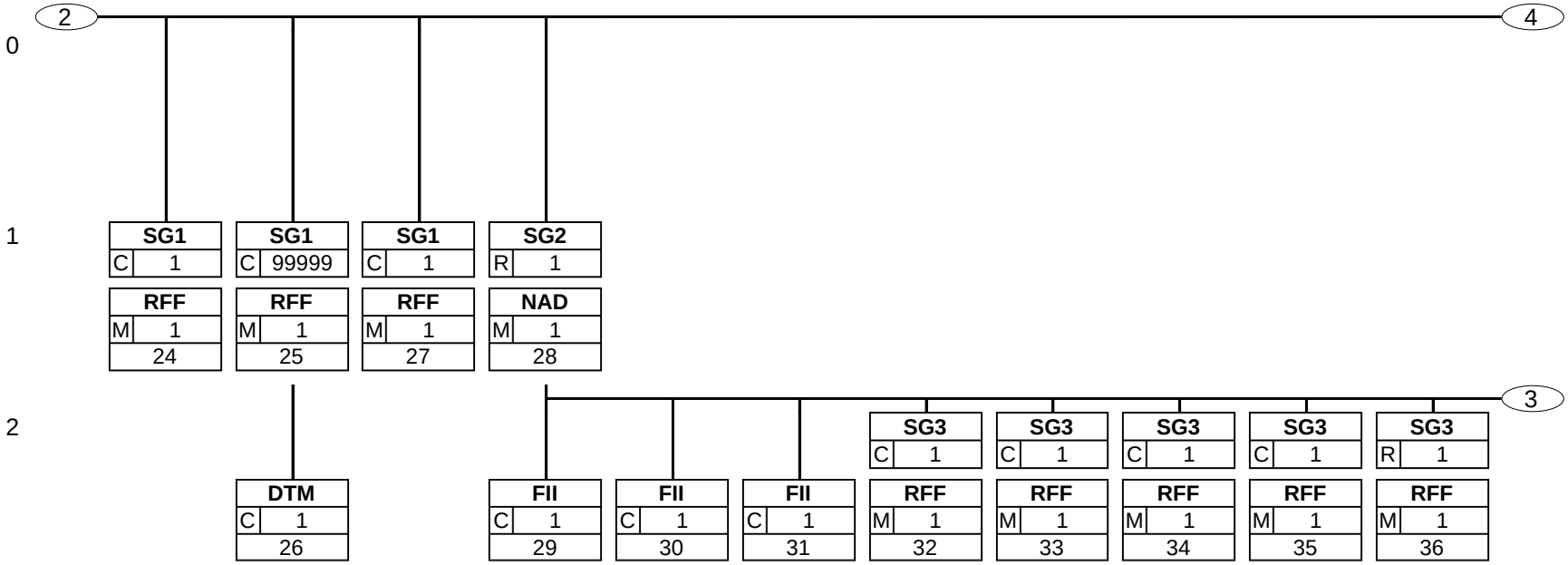
2
4
0
1
2
3
SG1 C 1
SG1 C 99999
SG1 C 1
SG2 R 1
RFF M 1 24
RFF M 1 25
RFF M 1 27
NAD M 1 28
DTM C 1 26
FII C 1 29
FII C 1 30
FII C 1 31
SG3 C 1
SG3 C 1
SG3 C 1
SG3 C 1
SG3 R 1
RFF M 1 32
RFF M 1 33
RFF M 1 34
RFF M 1 35
RFF M 1 36

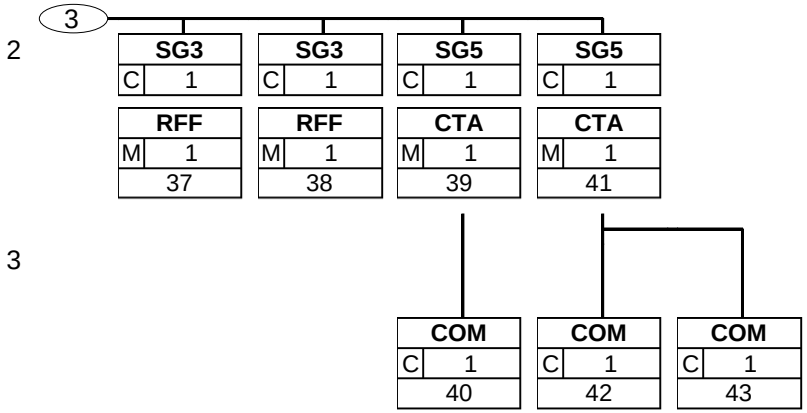
3
2
SG3
C 1
SG3
C 1
SG5
C 1
SG5
C 1
RFF
M 1
37
RFF
M 1
38
CTA
M 1
39
CTA
M 1
41
3
COM
C 1
40
COM
C 1
42
COM
C 1
43

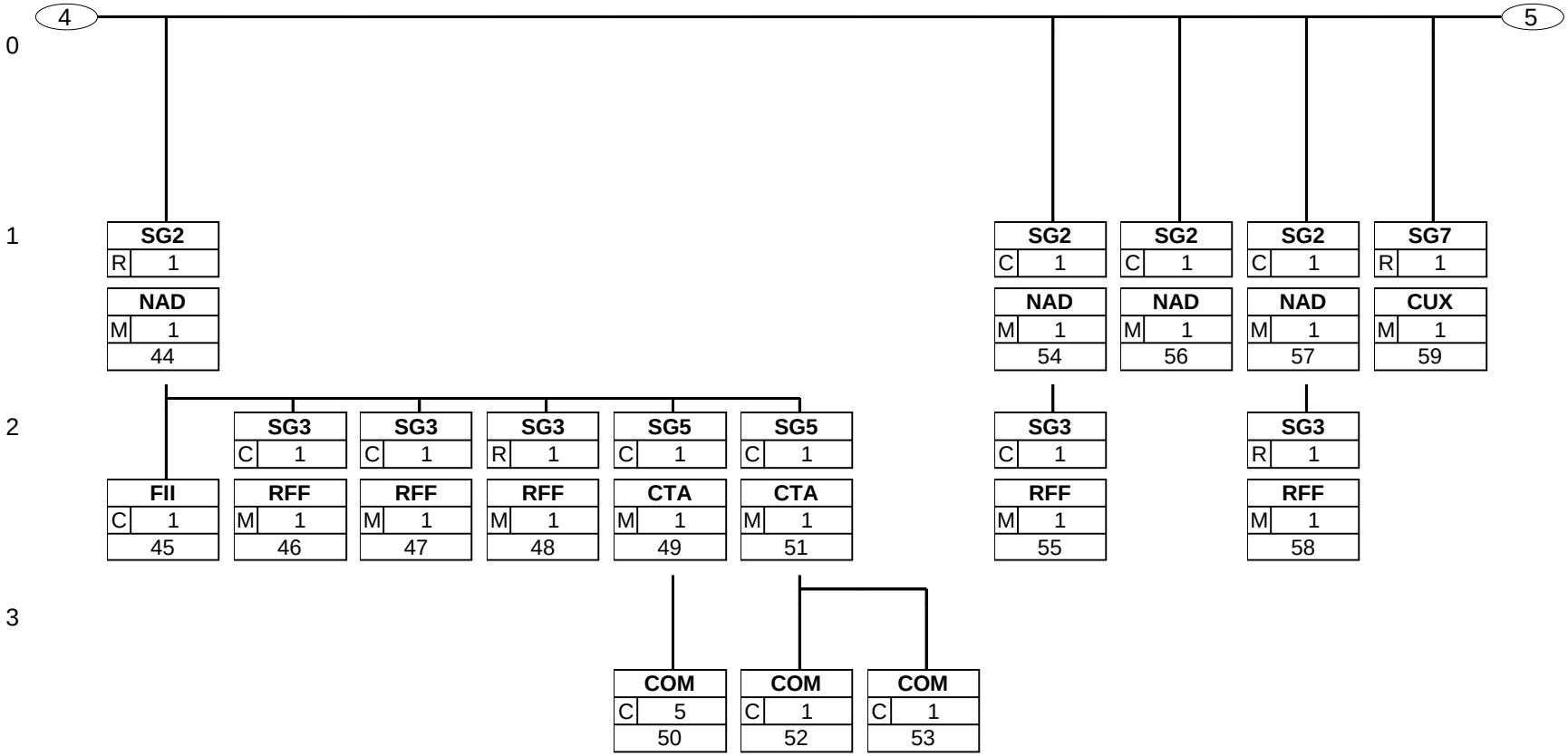
4
5
0
1
2
3
SG2 R 1
NAD M 1 44
FII C 1 45
SG3 C 1
RFF M 1 46
SG3 C 1
RFF M 1 47
SG3 R 1
RFF M 1 48
SG5 C 1
CTA M 1 49
COM C 5 50
SG5 C 1
CTA M 1 51
COM C 1 52
COM C 1 53
SG2 C 1
NAD M 1 54
SG3 C 1
RFF M 1 55
SG2 C 1
NAD M 1 56
SG2 C 1
NAD M 1 57
SG3 R 1
RFF M 1 58
SG7 R 1
CUX M 1 59

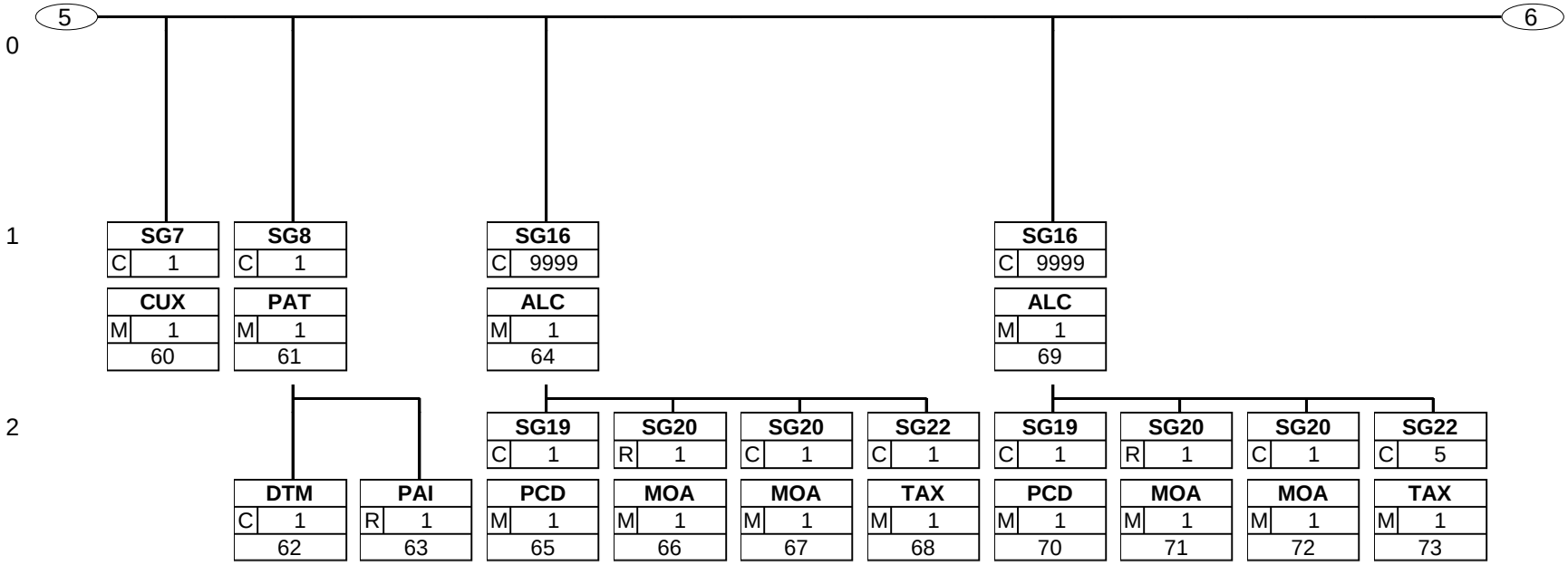
5
6
0
1
2
SG7 C 1
CUX M 1 60
SG8 C 1
PAT M 1 61
DTM C 1 62
PAI R 1 63
SG16 C 9999
ALC M 1 64
SG19 C 1
PCD M 1 65
SG20 R 1
MOA M 1 66
SG20 C 1
MOA M 1 67
SG22 C 1
TAX M 1 68
SG16 C 9999
ALC M 1 69
SG19 C 1
PCD M 1 70
SG20 R 1
MOA M 1 71
SG20 C 1
MOA M 1 72
SG22 C 5
TAX M 1 73

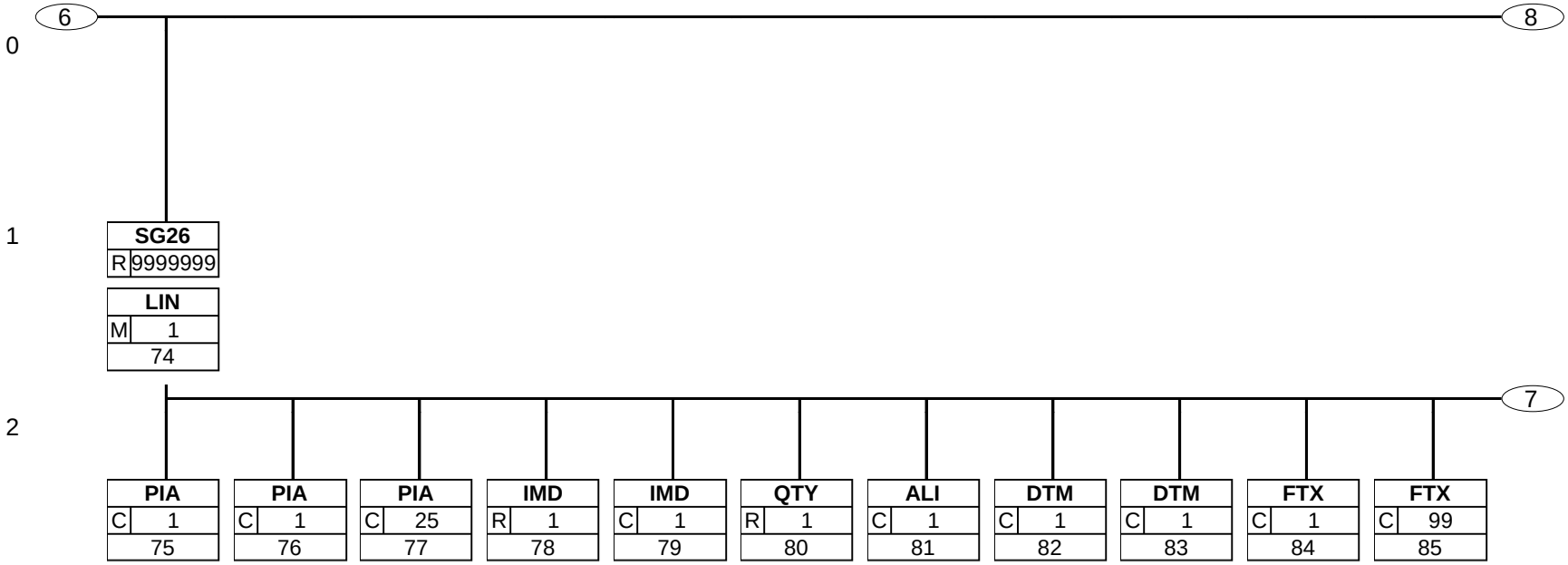
6
8
0
1
SG26
R 9999999
LIN
M 1
74
2
7
PIA C 1 75
PIA C 1 76
PIA C 25 77
IMD R 1 78
IMD C 1 79
QTY R 1 80
ALI C 1 81
DTM C 1 82
DTM C 1 83
FTX C 1 84
FTX C 99 85

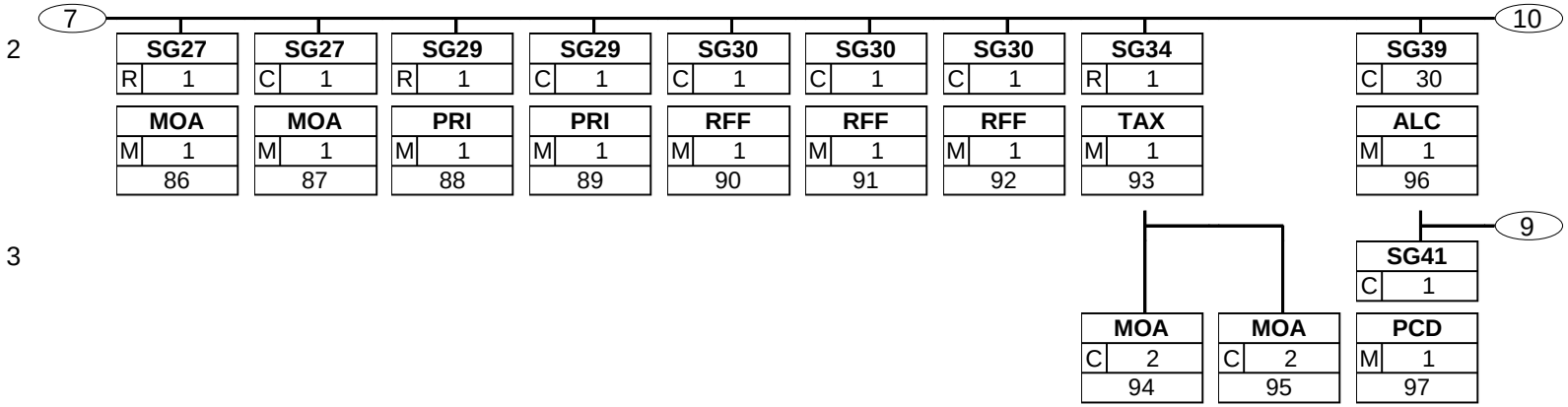
7
10
2
SG27 R 1
SG27 C 1
SG29 R 1
SG29 C 1
SG30 C 1
SG30 C 1
SG30 C 1
SG34 R 1
SG39 C 30
MOA M 1 86
MOA M 1 87
PRI M 1 88
PRI M 1 89
RFF M 1 90
RFF M 1 91
RFF M 1 92
TAX M 1 93
ALC M 1 96
9
3
SG41 C 1
MOA C 2 94
MOA C 2 95
PCD M 1 97

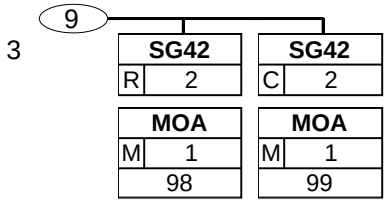
9
3
SG42
R 2
SG42
C 2
MOA
M 1
98
MOA
M 1
99

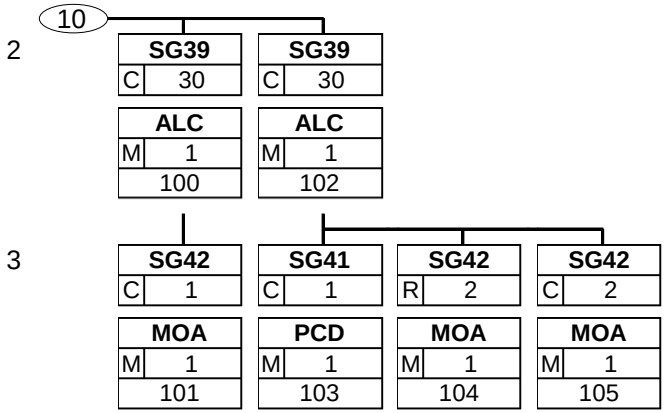
10
2
SG39
C 30
SG39
C 30
ALC
M 1
100
ALC
M 1
102
3
SG42
C 1
SG41
C 1
SG42
R 2
SG42
C 2
MOA
M 1
101
PCD
M 1
103
MOA
M 1
104
MOA
M 1
105

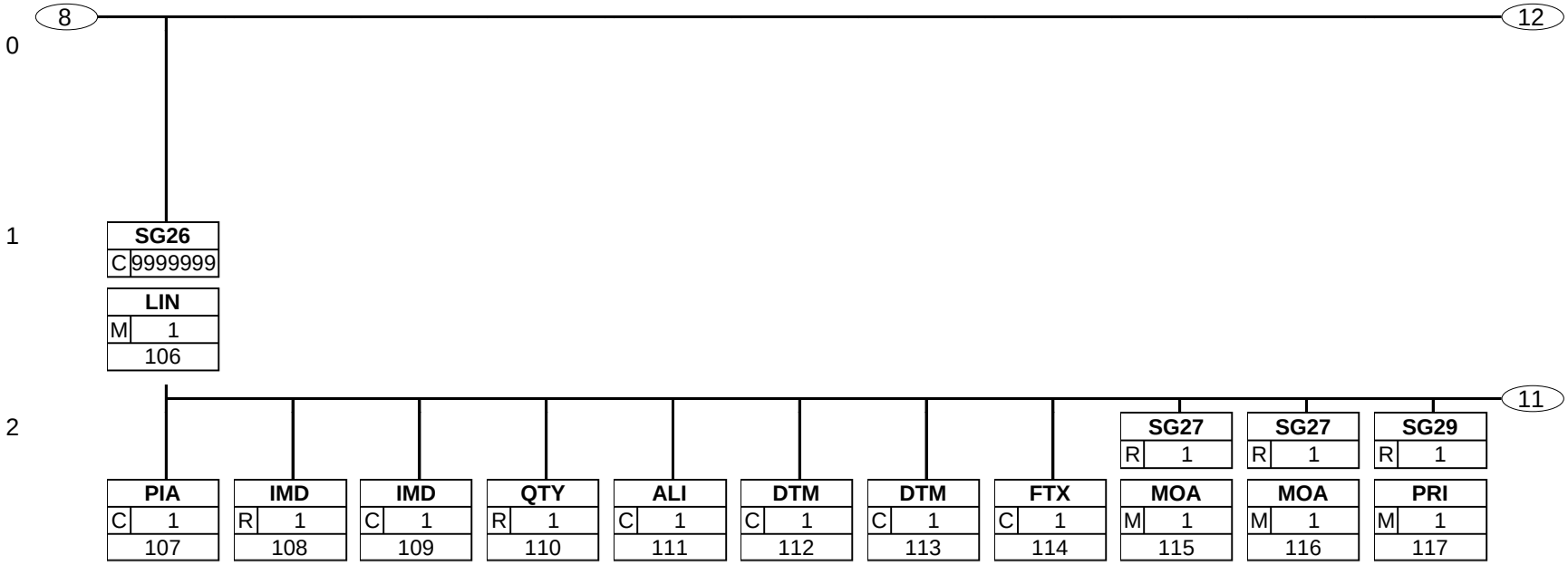
8
12
0
1
SG26
C 9999999
LIN
M 1
106
2
11
PIA
C 1
107
IMD
R 1
108
IMD
C 1
109
QTY
R 1
110
ALI
C 1
111
DTM
C 1
112
DTM
C 1
113
FTX
C 1
114
SG27
R 1
MOA
M 1
115
SG27
R 1
MOA
M 1
116
SG29
R 1
PRI
M 1
117

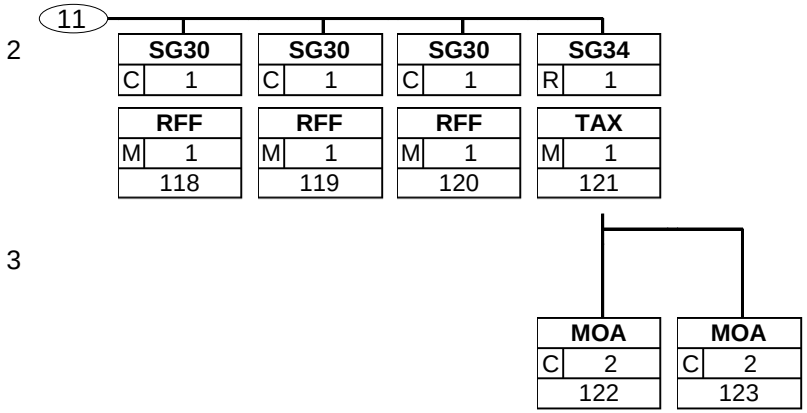
11
2
SG30
C 1
SG30
C 1
SG30
C 1
SG34
R 1
RFF
M 1
118
RFF
M 1
119
RFF
M 1
120
TAX
M 1
121
3
MOA
C 2
122
MOA
C 2
123

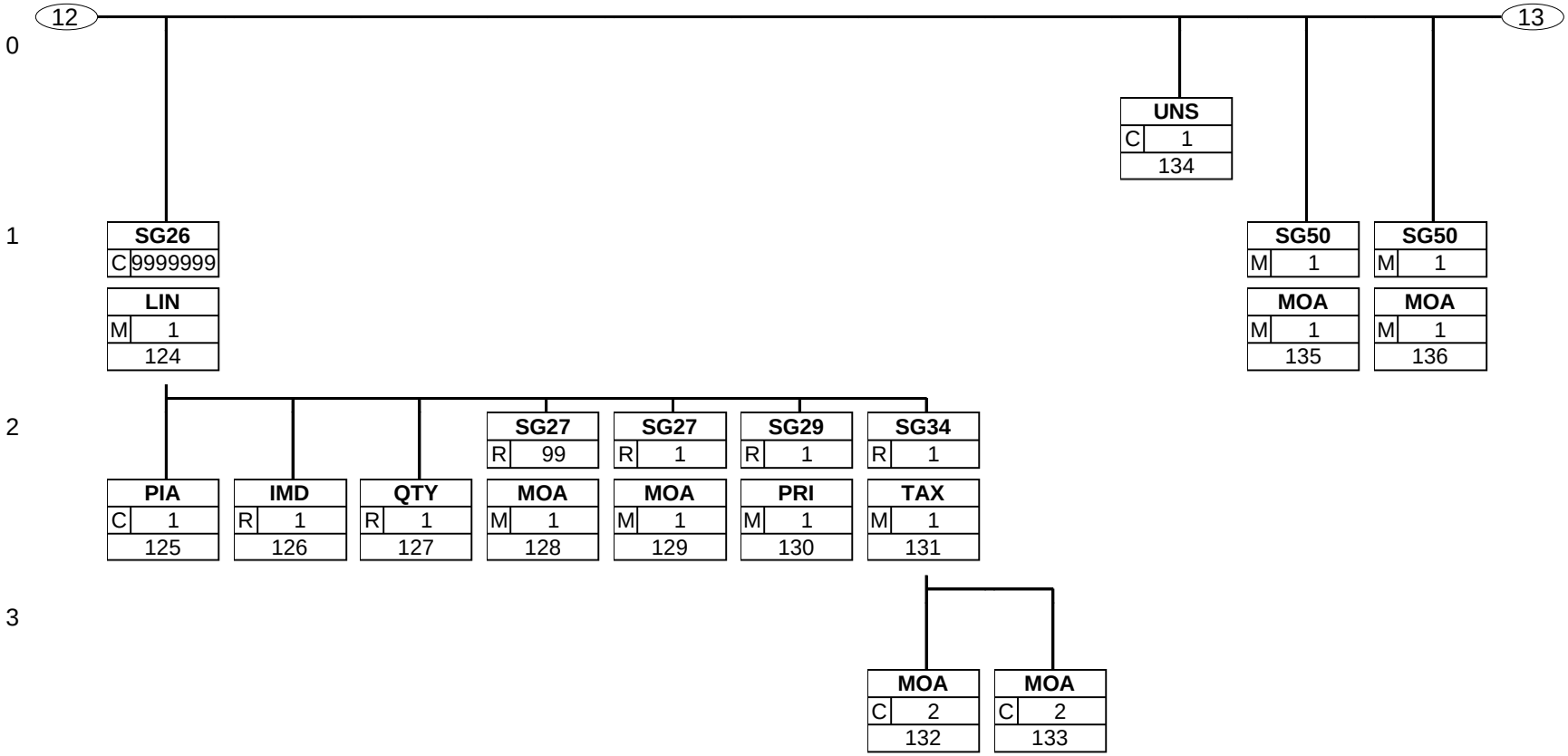
12
13
0
1
2
3
UNS
C 1
134
SG26
C 9999999
LIN
M 1
124
SG50
M 1
MOA
M 1
135
SG50
M 1
MOA
M 1
136
PIA
C 1
125
IMD
R 1
126
QTY
R 1
127
SG27
R 99
MOA
M 1
128
SG27
R 1
MOA
M 1
129
SG29
R 1
PRI
M 1
130
SG34
R 1
TAX
M 1
131
MOA
C 2
132
MOA
C 2
133

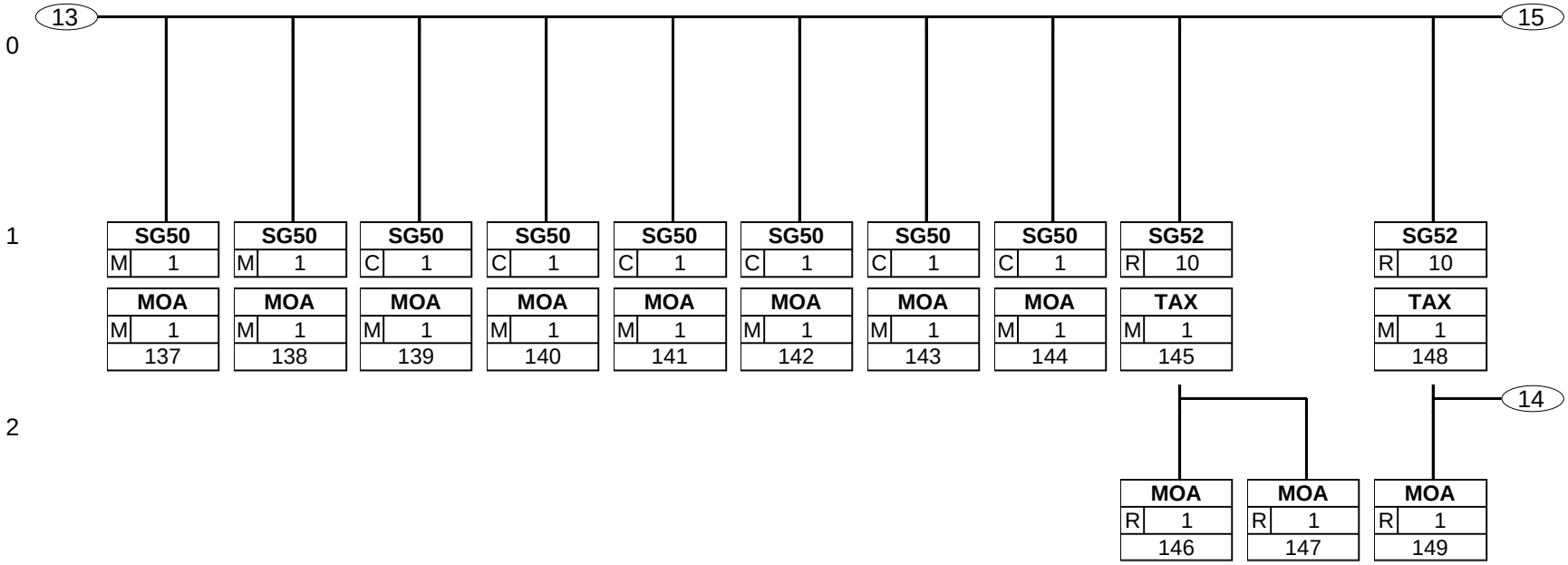
13
15
0
1
2
14
SG50 M 1
SG50 M 1
SG50 C 1
SG50 C 1
SG50 C 1
SG50 C 1
SG50 C 1
SG50 C 1
SG52 R 10
SG52 R 10
MOA M 1 137
MOA M 1 138
MOA M 1 139
MOA M 1 140
MOA M 1 141
MOA M 1 142
MOA M 1 143
MOA M 1 144
TAX M 1 145
TAX M 1 148
MOA R 1 146
MOA R 1 147
MOA R 1 149

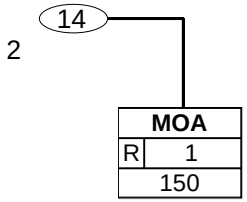
14
2
MOA
R
1
150

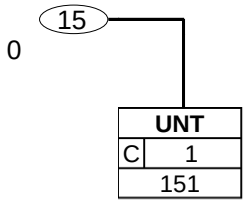
15
0
UNT
C
1
151

6 Podatki o segmentu

Posamezen segment je opisan po elementih in navodilih za uporabo the elementov. Navedene so povezave na poslovne termine (BT) semantičnega modela in primer vrednosti iz demonstracijskega primera[2]. Prikazane informacije so opisane v *e-SLOG 2.0 Elektronski račun – 1. del: Splošna navodila*, poglavje 8.3.3. Pri opisih segmenta je uporabljeno poimenovanje po EDIFACT, zato je opis v angleškem jeziku.

Segment number: 1

UNH - M 1 - Message header

Function:

To head, identify and specify a message.

Notes:
1. Data element S009/0057 is retained for upward compatibility. The use of S016 and/or S017 is encouraged in preference.
2. The combination of the values carried in data elements 0062 and S009 shall be used to identify uniquely the message within its group (if used) or if not used, within its interchange, for the purpose of acknowledgement.

EDIFACT			EAN		
Tag	Name	Format	St	Usage	Example
0062	Message reference number	an..14	**M**		TOSL110
S009	MESSAGE IDENTIFIER		**M**		
0065	Message type	an..6	**M**	INVOIC = Invoice message	INVOIC
0052	Message version number	an..3	**M**	D = Draft version/UN/EDIFACT Directory	D
0054	Message release number	an..3	**M**	01B = Release 2001 - B	01B
0051	Controlling agency, coded	an..3	**M**	UN = UN/CEFACT	UN

Segment Notes:

[2] Demonstracijski primer je v Dodatku C.

Segment number: 2

BGM - M 1 - Beginning of message					
Function: To indicate the type and function of a message and to transmit the identifying number.					
EDIFACT			EAN		
Tag	Name	Format	St	Usage	Example
C002	DOCUMENT/MESSAGE NAME		**R**		
1001	Document name code	an..3	**R**	380 = Commercial invoice 381 = Credit note - goods and services BT:Invoice type code(BT-3) DESC:A code specifying the functional type of the Invoice.	380
C106	DOCUMENT/MESSAGE IDENTIFICATION		**R**		
1004	Document identifier	an..70	**R**	BT:Invoice number (BT-1) DESC:A unique identification of the Invoice.	TOSL110
Segment Notes:					

Segment number: 3

DTM - M 1 - Date/time/period					
Function: To specify date, and/or time, or period.					
EDIFACT			EAN		
Tag	Name	Format	St	Usage	Example
C507	DATE/TIME/PERIOD		**M**		
2005	Date or time or period function code qualifier	an..3	**M**	137 = Document/message date/ time	137
2380	Date or time or period value	an..35	**R**	BT:Invoice issue date (BT-2) DESC:The date when the Invoice was issued.	2013-04-10
Segment Notes:					

Segment number: 4

DTM	- C	1 - Date/time/period			
Function: To specify date, and/or time, or period.					
EDIFACT			EAN		
Tag	Name	Format	St	Usage	Example
C507	DATE/TIME/PERIOD		**M**		
2005	Date or time or period function code qualifier	an..3	**M**	131 = Tax point date	131
2380	Date or time or period value	an..35	**R**	BT:Value added tax point date (BT-7) DESC:The date when the VAT becomes accountable for the Seller and for the Buyer in so far as that date can be determined and differs from the date of issue of the invoice, according to the VAT directive...	2013-04-10
Segment Notes:					

Segment number: 5

DTM	- C	1 - Date/time/period			
Function: To specify date, and/or time, or period.					
EDIFACT			EAN		
Tag	Name	Format	St	Usage	Example
C507	DATE/TIME/PERIOD		**M**		
2005	Date or time or period function code qualifier	an..3	**M**	3 = Invoice date/time 35 = Delivery date/time, actual 432 = Paid to date BT:Value added tax point date code (BT-8) DESC:The code of the date when the VAT becomes accountable for the Seller and for the Buyer.	35
Segment Notes:					

Segment number: 6

DTM - C 1 - Date/time/period					
Function: To specify date, and/or time, or period.					
EDIFACT			EAN		
Tag	Name	Format	St	Usage	Example
C507	DATE/TIME/PERIOD		**M**		
2005	Date or time or period function code qualifier	an..3	**M**	35 = Delivery date/time, actual	35
2380	Date or time or period value	an..35	**R**	BT:Actual delivery date (BT-72) DESC:The date on which the delivery is made.	2013-04-15
Segment Notes:					

Segment number: 7

DTM - C 1 - Date/time/period					
Function: To specify date, and/or time, or period.					
EDIFACT			EAN		
Tag	Name	Format	St	Usage	Example
C507	DATE/TIME/PERIOD		**M**		
2005	Date or time or period function code qualifier	an..3	**M**	167 = Charge period start date BT:DELIVERY OR INVOICE PERIOD (BG-14) DESC:A group of business terms providing information on the invoice period.	167
2380	Date or time or period value	an..35	**R**	BT:Invoicing period start date (BT-73) DESC:The date when the Invoice period starts.	2013-03-10
Segment Notes:					

Segment number: 8

DTM - C 1 - Date/time/period					
Function: To specify date, and/or time, or period.					
EDIFACT			EAN		
Tag	Name	Format	St	Usage	Example
C507	DATE/TIME/PERIOD		**M**		
2005	Date or time or period function code qualifier	an..3	**M**	168 = Charge period end date BT:DELIVERY OR INVOICE PERIOD (BG-14) DESC:A group of business terms providing information on the invoice period.	168
2380	Date or time or period value	an..35	**R**	BT:Invoicing period end date (BT-74) DESC:The date when the Invoice period ends.	2013-04-10
Segment Notes:					

Segment number: 9

FTX	- C	1 - Free text			
Function: To provide free form or coded text information.					
EDIFACT			EAN		
Tag	Name	Format	St	Usage	Example
4451	Text subject code qualifier	an..3	**M**	AAB = Terms of payments	AAB
4453	Free text function code	an..3	**N**	Not used	
C107	TEXT REFERENCE		**N**		
4441	Free text value code	an..17	**N**	Not used	
C108	TEXT LITERAL		**R**		
4440	Free text value	an..512	**M**	BT:Payment terms (BT-20) DESC:A textual description of the payment terms that apply to the amount due for payment (Including description of possible penalties).	50% prepaid, 50% within one month
4440	Free text value	an..512	**C**		Additional text line 2
4440	Free text value	an..512	**C**		Additional text line 3
4440	Free text value	an..512	**C**		Additional text line 4
4440	Free text value	an..512	**C**		Additional text line 5
Segment Notes:					

Segment number: 10

FTX	- C	1 - Free text			
Function: To provide free form or coded text information.					
EDIFACT			EAN		
Tag	Name	Format	St	Usage	Example
4451	Text subject code qualifier	an..3	**M**	REG = Regulatory information	REG
4453	Free text function code	an..3	**N**	Not used	
C107	TEXT REFERENCE		**N**		
4441	Free text value code	an..17	**N**	Not used	
C108	TEXT LITERAL		**R**		
4440	Free text value	an..512	**M**	BT:Seller additional legal information (BT-33) DESC:Additional legal information relevant for the Seller.	Export
Segment Notes:					

Segment number: 11

FTX - C 99 - Free text					
Function: To provide free form or coded text information.					
EDIFACT			EAN		
Tag	Name	Format	St	Usage	Example
4451	Text subject code qualifier	an..3	**M**	GEN = Entire transaction set BT:Invoice note subject code (BT-21) DESC:The subject of the following textual note. Use UN code list 4451; GEN as default; others as appropriate	GEN
4453	Free text function code	an..3	**N**	Not used	
C107	TEXT REFERENCE		**N**		
4441	Free text value code	an..17	**N**	Not used	
C108	TEXT LITERAL		**R**		
4440	Free text value	an..512	**M**	BT:Invoice note (BT-22) DESC:A textual note that gives unstructured information that is relevant to the Invoice as a whole.	Ordered through our website

Segment Notes:

BT:INVOICE NOTE (BG-1)
DESC:A group of business terms providing textual notes that are relevant for the invoice, together with an indication of the note subject.

Segment number: 12

FTX	- M	1 - Free text			
Function: To provide free form or coded text information.					
EDIFACT			EAN		
Tag	Name	Format	St	Usage	Example
4451	Text subject code qualifier	an..3	**M**	DOC = Documentation instructions	DOC
4453	Free text function code	an..3	**N**	Not used	
C107	TEXT REFERENCE		**C**		
4441	Free text value code	an..17	**M**	BT:Business process type (BT-23) DESC:Identifies the business process context in which the transaction appears, to enable the Buyer to process the Invoice in an appropriate way. P1 = Invoicing of deliveries of goods and services against purchase orders, based on a contract P2 = Invoicing deliveries of goods and services based on a contract P3 = Invoicing the delivery of an incidental purchase order P4 = Pre-payment P5 = Spot payment P6 = Payment in advance of delivery P7 = Invoices with references to a despatch advice P8 = Invoices with references to a despatch advice and a receiving advice P9 = Credit notes or invoices with negative amounts, issued for a variety of reasons including the return of empty packaging P10 = Corrective invoicing (cancellation/correction of an invoice) P11 = Partial and final invoicing P12 = Self billing	P1
C108	TEXT LITERAL		**R**		
4440	Free text value	an..512	**M**	BT:Specification identifier (BT-24) DESC:An identification of the specification containing the total set of rules regarding semantic content, cardinalities and business rules to which the data contained in the instance document conforms.	urn?:cen.eu?:en16931?:2017
Segment Notes: DESC:A group of business terms providing information on the business process and rules applicable to the Invoice document. BT:PROCESS CONTROLE (BG-2)					

Segment number: 13

FTX	- C	1 - Free text			
Function: To provide free form or coded text information.					
EDIFACT			EAN		
Tag	Name	Format	St	Usage	Example
4451	Text subject code qualifier	an..3	**M**	AAT = Mode of settlement information	AAT
4453	Free text function code	an..3	**N**	Not used	
C107	TEXT REFERENCE		**N**		
4441	Free text value code	an..17	**N**	Not used	
C108	TEXT LITERAL		**R**		
4440	Free text value	an..512	**M**	BT:Payment means text (BT-82) DESC:The means, expressed as text, for how a payment is expected to be or has been settled. Code AAT may be used for other than IATA	Half prepaid
Segment Notes:					

Segment number: 14

FTX - C 1 - Free text					
Function: To provide free form or coded text information.					
EDIFACT			EAN		
Tag	Name	Format	St	Usage	Example
4451	Text subject code qualifier	an..3	**M**	AGM = Exemption	AGM
4453	Free text function code	an..3	**N**	Not used	
C107	TEXT REFERENCE		**C**		
4441	Free text value code	an..17	**M**	BT:VAT exemption reason code (BT-121) DESC:A coded statement of the reason for why the amount is exempted from VAT.	
C108	TEXT LITERAL		**R**		
4440	Free text value	an..512	**M**	BT:VAT exemption reason text (BT-120) DESC:A textual statement of the reason why the amount is exempted from VAT or why no VAT is being charged.	Exempt New Means of Transport
Segment Notes:					

Segment number: 15

FTX - C 1 - Free text					
Function: To provide free form or coded text information.					
EDIFACT			EAN		
Tag	Name	Format	St	Usage	Example
4451	Text subject code qualifier	an..3	**M**	PMD = Payment detail/remittance information	PMD
4453	Free text function code	an..3	**N**	Not used	
C107	TEXT REFERENCE		**C**		
4441	Free text value code	an..17	**M**	BT:VAT exemption reason code (BT-121) DESC:A coded statement of the reason for why the amount is exempted from VAT.	
C108	TEXT LITERAL		**R**		
4440	Free text value	an..512	**M**	BT:Remittance information (BT-83) (Unstructered remittance information) DESC:A textual value used to establish a link between the payment and the Invoice, issued by the Seller (unstructured).	TOSL110
Segment Notes:					

Segment number: 16

FTX	- C	1 - Free text			
Function: To provide free form or coded text information.					
EDIFACT			EAN		
Tag	Name	Format	St	Usage	Example
4451	Text subject code qualifier	an..3	**M**	TXD = Tax declaration	TXD
4453	Free text function code	an..3	**N**	Not used	
C107	TEXT REFERENCE		**N**		
4441	Free text value code	an..17	**N**	Not used	
C108	TEXT LITERAL		**R**		
4440	Free text value	an..512	**M**	BT: Date and time of issuing the invoice(NBT-020) DESC: Date and time of issuing the invoice in following format: YYYY-MMDDTHH:MM:SS.	2013-04-10T15?:03?:50
4440	Free text value	an..512	**R**	BT: Mark of an individual (operator) (NBT-021) DESC: The mark of an individual (operator), who issues the invoice with the usage of the electronic device for issuing invoices.	PRODAJALEC1
4440	Free text value	an..512	**R**	BT: EOR-Unique identification invoice mark(NBT-022) DESC: EOR-Unique identification invoice mark.	56dcaf93-933a-497d-b864-0ba1e8f4fa23
4440	Free text value	an..512	**R**	BT: ZOI-Protective mark of the invoice issuer(NBT-023) DESC: ZOI-Protective mark of the invoice issuer.	8402f0a963e37b2258e034fc8ae7ffc1
4440	Free text value	an..512	**R**	BT: Mark for printing QR code, PDF417 code and code 128 (NBT-024) DESC: Mark for printed code (60 numerical places) consisted of: ZOI, tax number of the person liable, date and time of issuing invoice and control character.	279042272585972554922067893753871413584876543211601021503002
Segment Notes: BT:FISCAL VERIFICATION OF INVOICES (NBG-2) DESC:A group of business terms providing information on Fiscal verification of invoices.					

Segment number: 17

SG1	- C	1	- RFF
RFF	- M	1	- Reference

Function:

To specify a reference.

EDIFACT			EAN		
Tag	Name	Format	St	Usage	Example
C506	REFERENCE		**M**		
1153	Reference code qualifier	an..3	**M**	AEP = Project number	AEP
1154	Reference identifier	an..70	**R**	BT:Project reference (BT-11) DESC:The identification of the project the invoice refers to.	Project345

Segment Notes:

Segment number: 18

SG1	- C	1	- RFF
RFF	- M	1	- Reference

Function:

To specify a reference.

EDIFACT			EAN		
Tag	Name	Format	St	Usage	Example
C506	REFERENCE		**M**		
1153	Reference code qualifier	an..3	**M**	CT = Contract number	CT
1154	Reference identifier	an..70	**R**	BT:Contract reference (BT-12) DESC:The identification of a contract.	2013-05

Segment Notes:

Segment number: 19

SG1	- C	1	- RFF
RFF	- M	1	- Reference

Function:

To specify a reference.

EDIFACT			EAN		
Tag	Name	Format	St	Usage	Example
C506	REFERENCE		**M**		
1153	Reference code qualifier	an..3	**M**	ON = Order number (buyer)	ON
1154	Reference identifier	an..70	**R**	BT:Purchase order reference (BT-13) DESC:An identifier of a referenced purchase order, issued by the Buyer.	PO4711

Segment Notes:

Segment number: 20

SG1	- C	1	- RFF
RFF	- M	1	- Reference

Function:

To specify a reference.

EDIFACT			EAN		
Tag	Name	Format	St	Usage	Example
C506	REFERENCE		**M**		
1153	Reference code qualifier	an..3	**M**	VN = Order number (supplier)	VN
1154	Reference identifier	an..70	**R**	BT:Sales order reference (BT-14) DESC:An identifier of a referenced sales order, issued by the Seller..	123

Segment Notes:

Segment number: 21

SG1	- C	1	- RFF
RFF	- M	1	- Reference

Function:

To specify a reference.

EDIFACT			EAN		
Tag	Name	Format	St	Usage	Example
C506	REFERENCE		**M**		
1153	Reference code qualifier	an..3	**M**	ALO = Receiving advice number	ALO
1154	Reference identifier	an..70	**R**	BT:Receiving advice reference (BT-15) DESC:An identifier of a referenced receiving advice.	3544

Segment Notes:

Segment number: 22

SG1	- C	1	- RFF
RFF	- M	1	- Reference

Function:

To specify a reference.

EDIFACT			EAN		
Tag	Name	Format	St	Usage	Example
C506	REFERENCE		**M**		
1153	Reference code qualifier	an..3	**M**	AAK = Despatch advice number	AAK
1154	Reference identifier	an..70	**R**	BT:Despatch advice reference (BT-16) DESC:An identifier of a referenced despatch advice.	5433

Segment Notes:

Segment number: 23

SG1	- C	1	- RFF
RFF	- M	1	- Reference

Function:

To specify a reference.

EDIFACT			EAN		
Tag	Name	Format	St	Usage	Example
C506	REFERENCE		**M**		
1153	Reference code qualifier	an..3	**M**	GC = Government contract number	GC
1154	Reference identifier	an..70	**R**	BT:Tender or lot reference (BT-17) DESC:The identification of the call for tender or lot the invoice relates to.	Lot567

Segment Notes:

Segment number: 24

SG1	- C	1	- RFF
RFF	- M	1	- Reference

Function:

To specify a reference.

EDIFACT			EAN		
Tag	Name	Format	St	Usage	Example
C506	REFERENCE		**M**		
1153	Reference code qualifier	an..3	**M**	ATS = External object reference BT:Scheme identifier(BT-18-1) DESC:The identification scheme identifier of the Invoiced object identifier. Use UN code list 1153; Use ATS as default value	ATS
1154	Reference identifier	an..70	**R**	BT:Invoiced object identifier (BT-18) DESC:The identification of the call for tender or lot the invoice relates to.	OBJ999

Segment Notes:

Segment number: 25

SG1	- C	99999	-	RFF-DTM
RFF	- M	1	-	Reference

Function:

To specify a reference.

EDIFACT			EAN		
Tag	Name	Format	St	Usage	Example
C506	REFERENCE		**M**		
1153	Reference code qualifier	an..3	**M**	OI = Previous invoice number	OI
1154	Reference identifier	an..70	**R**	BT:Preceding Invoice number (BT-25) DESC:The identification of an Invoice that was previously sent by the Seller..	TOSL109

Segment Notes:

Segment number: 26

SG1	- C	99999	- RFF-DTM
DTM	- C	1	- Date/time/period

Function:

To specify date, and/or time, or period.

EDIFACT			EAN		
Tag	Name	Format	St	Usage	Example
C507	DATE/TIME/PERIOD		**M**		
2005	Date or time or period function code qualifier	an..3	**M**	384 = Previous invoice date	384
2380	Date or time or period value	an..35	**R**	BT:Preceding Invoice issue date(BT-26) DESC:The date when the Preceding Invoice was issued.	2013-03-10

Segment Notes:

Segment number: 27

SG1	- C	1	- RFF
RFF	- M	1	- Reference

Function:

To specify a reference.

EDIFACT			EAN		
Tag	Name	Format	St	Usage	Example
C506	REFERENCE		**M**		
1153	Reference code qualifier	an..3	**M**	PQ = Payment reference	PQ
1154	Reference identifier	an..70	**R**	BT:Remittance information (BT-83) (Structered remittance information) DESC:A textual value used to establish a link between the payment and the Invoice, issued by the Seller (structured)..	Payref1

Segment Notes:

Segment number: 28

SG2	- R	1	- NAD-FII-SG3-SG5
NAD	- M	1	- Name and address

Function:

To specify the name/address and their related function, either by C082 only and/or unstructured by C058 or structured by C080 thru 3207.

EDIFACT			EAN		
Tag	Name	Format	St	Usage	Example
3035	Party function code qualifier	an..3	**M**	BY = Buyer BT:BUYER (BG-7) DESC:A group of business terms providing information about the Buyer.	BY
C082	PARTY IDENTIFICATION DETAILS		**C**		
3039	Party identifier	an..35	**M**	BT:Buyer identifier(BT-46) DESC:An identifier of the Buyer..	579000043 6057
1131	Code list identification code	an..17	**C**	BT:Buyer identifier identification scheme identifier(BT-46-1) DESC:The identification scheme identifier of the Buyer identifier. Use ISO 6523 ICD list; e.g. 0088 = Global Location Number (GLN); 0060 = Data Universal Numbering System (D-U-N-S)	0088
C058	NAME AND ADDRESS		**N**		
3124	Name and address description	an..35	**N**	Not used	
C080	PARTY NAME		**R**		
3036	Party name	an..70	**M**	BT:Buyer name(BT-44) DESC:The full name of the Buyer.	BuyerComp any ltd
3036	Party name	an..70	**C**	BT:Buyer trading name(BT-45) DESC:A name by which the Buyer is known, other than Buyer name (also known as Business name).	Buyco
C059	STREET		**C**		
3042	Street and number or post office box identifier	an..35	**M**	BT:Buyer address line 1(BT-50) DESC:The main address line in an address.	Anystreet, Building 1
3042	Street and number or post office box identifier	an..35	**C**	BT:Buyer address line 2(BT-51) DESC:An additional address line in an address that can be used to give further details supplementing the main line.	5th floor
3042	Street and number or post office box identifier	an..35	**C**	BT:Buyer address line 3(BT-163) DESC:An additional address line in an address that can be used to give further details supplementing the main line.	5th door
3164	City name	an..35	**C**	BT:Buyer city(BT-52) DESC:The common name of the city, town or village, where the Buyer's address is located.	Anytown

Segment number: 28

EDIFACT			EAN		
Tag	Name	Format	St	Usage	Example
C819	COUNTRY SUB-ENTITY DETAILS		**C**		
3229	Country sub-entity name code	an..9	**N**	Not used	
1131	Code list identification code	an..17	**N**	Not used	
3055	Code list responsible agency code	an..3	**N**	Not used	
3228	Country sub-entity name	an..70	**R**	BT:Buyer country subdivision(BT-54) DESC:The subdivision of a country.	Jutland
3251	Postal identification code	an..17	**C**	BT:Buyer post code(BT-53) DESC:The identifier for an addressable group of properties according to the relevant postal service.	101
3207	Country name code	an..3	**R**	BT:Buyer country code(BT-55) DESC:A code that identifies the country.	DK

Segment Notes:

BT:BUYER POSTAL ADDRESS (BG-8)
DESC:A group of business terms providing information about the postal address for the Buyer.

Segment number: 29

SG2	- R	1 -	NAD-FII-SG3-SG5
FII	- C	1 -	Financial institution information

Function:

To identify an account and a related financial institution.

EDIFACT			EAN		
Tag	Name	Format	St	Usage	Example
3035	Party function code qualifier	an..3	**M**	PB = Paying financial institution BT:PAYMENT CARD INFORMATION(BG-18) DESC:A group of business terms providing information about card used for payment contemporaneous with invoice issuance.	PB
C078	ACCOUNT HOLDER IDENTIFICATION		**R**		
3194	Account holder identifier	an..35	**R**	BT:Payment card primary account number(BT-87) DESC:The Primary Account Number (PAN) of the card used for payment	510510?*?*?*?*?*?*510 0
3192	Account holder name	an..35	**C**	BT:Payment card holder name(BT-88) DESC:The name of the payment card holder.	John hansen

Segment Notes:

Segment number: 30

SG2	- R	1 -	NAD-FII-SG3-SG5
FII	- C	1 -	Financial institution information

Function:

To identify an account and a related financial institution.

EDIFACT			EAN		
Tag	Name	Format	St	Usage	Example
3035	Party function code qualifier	an..3	**M**	BI = Buyer's financial institution BT:DIRECT DEBIT(BG-19) DESC:A group of business terms to specify a direct debit.	BI
C078	ACCOUNT HOLDER IDENTIFICATION		**R**		
3194	Account holder identifier	an..35	**R**	BT:Debited account identifier(BT-91) DESC:The account to be debited by the direct debit.	DK1212341 234123412

Segment Notes:

Segment number: 31

SG2	- R	1 -	NAD-FII-SG3-SG5
FII	- C	1 -	Financial institution information

Function:

To identify an account and a related financial institution.

EDIFACT			EAN		
Tag	Name	Format	St	Usage	Example
3035	Party function code qualifier	an..3	**M**	BB = Buyer bank identification BT:RECEIVING BANK ACCOUNT(NBG-01) DESC:A group of business terms to specify a receiving bank account.	BB
C078	ACCOUNT HOLDER IDENTIFICATION		**R**		
3194	Account holder identifier	an..35	**R**	BT:Receiving bank account identifier-IBAN (NBT-010) DESC:A unique identifier of the financial receiving account.	DK1212341234123412
3192	Account holder name	an..35	**C**	BT:Receiving bank account holder name(NBT-011) DESC:The name of the bank receiving account holder.	BuyerCompany ltd
C088	INSTITUTION IDENTIFICATION		**R**		
3433	Institution name code	an..11	**R**	BT:Receiving bank identifier-BIC(NBT-012) DESC:An identifier for the receiving bank.	DNBANOKK

Segment Notes:

Segment number: 32

SG2	- R	1	- NAD-FII-SG3-SG5
SG3	- C	1	- RFF
RFF	- M	1	- Reference

Function:

To specify a reference.

EDIFACT			EAN		
Tag	Name	Format	St	Usage	Example
C506	REFERENCE		**M**		
1153	Reference code qualifier	an..3	**M**	CR = Customer reference number	CR
1154	Reference identifier	an..70	**R**	BT:Buyer reference (BT-10) DESC:An identifier assigned by the Buyer used for internal routing purposes.	qwerty

Segment Notes:

Segment number: 33

SG2	- R	1	- NAD-FII-SG3-SG5
SG3	- C	1	- RFF
RFF	- M	1	- Reference

Function:

To specify a reference.

EDIFACT			EAN		
Tag	Name	Format	St	Usage	Example
C506	REFERENCE		**M**		
1153	Reference code qualifier	an..3	**M**	AOU = Cost account	AOU
1154	Reference identifier	an..70	**R**	BT:Buyer accounting reference (BT-19) DESC:A textual value that specifies where to book the relevant data into the Buyer's financial accounts.	67543

Segment Notes:

Segment number: 34

SG2	- R	1 -	NAD-FII-SG3-SG5
SG3	- C	1 -	RFF
RFF	- M	1 -	Reference

Function:

To specify a reference.

EDIFACT			EAN		
Tag	Name	Format	St	Usage	Example
C506	REFERENCE		**M**		
1153	Reference code qualifier	an..3	**M**	GN = Government reference number BT:Buyer legal registration identifier identification scheme identifier (BT-47-1). DESC:The identification scheme identifier of the Buyer legal registration identifier.	GN
1154	Reference identifier	an..70	**R**	BT:Buyer legal registration identifier (BT-47) DESC:An identifier issued by an official registrar that identifies the Buyer as a legal entity or person.	DK16356607

Segment Notes:

Segment number: 35

SG2	- R	1	- NAD-FII-SG3-SG5
SG3	- C	1	- RFF
RFF	- M	1	- Reference

Function:

To specify a reference.

EDIFACT			EAN		
Tag	Name	Format	St	Usage	Example
C506	REFERENCE		**M**		
1153	Reference code qualifier	an..3	**M**	VA = VAT registration number	VA
1154	Reference identifier	an..70	**R**	BT:Buyer VAT identifier (BT-48) DESC:The Buyer's VAT identifier (also known as Buyer VAT identification number).	DK16356607

Segment Notes:

Segment number: 36

SG2	- R	1	- NAD-FII-SG3-SG5
SG3	- R	1	- RFF
RFF	- M	1	- Reference

Function:

To specify a reference.

EDIFACT			EAN		
Tag	Name	Format	St	Usage	Example
C506	REFERENCE		**M**		
1153	Reference code qualifier	an..3	**M**	AHP = Tax registration number	AHP
1154	Reference identifier	an..70	**R**	BT:Buyer tax registration number (NBT-013) DESC:The local identification of the Buyer for tax purposes.	DK16356607

Segment Notes:

Segment number: 37

SG2	- R	1	- NAD-FII-SG3-SG5
SG3	- C	1	- RFF
RFF	- M	1	- Reference

Function:

To specify a reference.

EDIFACT			EAN		
Tag	Name	Format	St	Usage	Example
C506	REFERENCE		**M**		
1153	Reference code qualifier	an..3	**M**	AVS = Mandate Reference BT:DIRECT DEBIT(BG-19) DESC:A group of business terms to specify a direct debit.	AVS
1154	Reference identifier	an..70	**R**	BT:Mandate reference identifier (BT-89) DESC:Unique identifier assigned by the Payee for referencing the direct debit mandate.	123456

Segment Notes:

Segment number: 38

SG2	- R	1	- NAD-FII-SG3-SG5
SG3	- C	1	- RFF
RFF	- M	1	- Reference

Function:

To specify a reference.

EDIFACT			EAN		
Tag	Name	Format	St	Usage	Example
C506	REFERENCE		**M**		
1153	Reference code qualifier	an..3	**M**	AII = Bank's common transaction reference number BT:DIRECT DEBIT(BG-19) DESC:A group of business terms to specify a direct debit.	AII
1154	Reference identifier	an..70	**R**	BT:Bank assigned creditor identifier (BT-90) DESC:Unique banking reference identifier of the Payee or Seller assigned by the Payee or Seller bank.	DK5678

Segment Notes:

Segment number: 39

SG2	- R	1	- NAD-FII-SG3-SG5
SG5	- C	1	- CTA-COM
CTA	- M	1	- Contact information

Function:

To identify a person or a department to whom communication should be directed.

EDIFACT			EAN		
Tag	Name	Format	St	Usage	Example
3139	Contact function code	an..3	**R**	IC = Information contact	IC

Segment Notes:

Segment number: 40

SG2	- R	1	- NAD-FII-SG3-SG5
SG5	- C	1	- CTA-COM
COM	- C	1	- Communication contact

Function:

To identify a communication number of a department or a person to whom communication should be directed.

EDIFACT			EAN		
Tag	Name	Format	St	Usage	Example
C076	COMMUNICATION CONTACT		**M**		
3148	Communication address identifier	an..512	**M**	BT:Buyer electronic address(BT-49) DESC:Identifies the Buyer's electronic address to which a business document should be delivered.	info@buyer company.dk
3155	Communication address code qualifier	an..3	**M**	EM = Electronic mail BT:Buyer electronic address identification scheme identifier (BT-49-1) DESC:The identification scheme identifier of the Buyer electronic address. Use EM (= Email) as default; look at code list mapping for other values	EM

Segment Notes:

Segment number: 41

SG2	- R	1	- NAD-FII-SG3-SG5
SG5	- C	1	- CTA-COM
CTA	- M	1	- Contact information

Function:

To identify a person or a department to whom communication should be directed.

EDIFACT			EAN		
Tag	Name	Format	St	Usage	Example
3139	Contact function code	an..3	**R**	PD = Purchasing contact BT:BUYER CONTACT(BG-9) DESC:A group of business terms providing contact information relevant for the Buyer.	PD
C056	DEPARTMENT OR EMPLOYEE DETAILS		**C**		
3413	Department or employee name code	an..17	**R**	BT:Buyer contact point(BT-56) DESC:A contact point for a legal entity or person.	John Hansen

Segment Notes:

Segment number: 42

SG2	- R	1	- NAD-FII-SG3-SG5
SG5	- C	1	- CTA-COM
COM	- C	1	- Communication contact

Function:

To identify a communication number of a department or a person to whom communication should be directed.

EDIFACT			EAN		
Tag	Name	Format	St	Usage	Example
C076	COMMUNICATION CONTACT		**M**		
3148	Communication address identifier	an..512	**M**	BT:Buyer contact email address(BT-58) DESC:An e-mail address for the contact point.	info@buyer company.dk
3155	Communication address code qualifier	an..3	**M**	EM = Electronic mail	EM

Segment Notes:

Segment number: 43

SG2	- R	1	- NAD-FII-SG3-SG5
SG5	- C	1	- CTA-COM
COM	- C	1	- Communication contact

Function:

To identify a communication number of a department or a person to whom communication should be directed.

EDIFACT			EAN		
Tag	Name	Format	St	Usage	Example
C076	COMMUNICATION CONTACT		**M**		
3148	Communication address identifier	an..512	**M**	BT:Buyer contact telephone number. (BT-57) DESC:A phone number for the contact point.	4598989898
3155	Communication address code qualifier	an..3	**M**	TE = Telephone	TE

Segment Notes:

Segment number: 44

SG2	- R	1 -	NAD-FII-SG3-SG5
NAD	- M	1 -	Name and address

Function:

To specify the name/address and their related function, either by C082 only and/or unstructured by C058 or structured by C080 thru 3207.

EDIFACT			EAN		
Tag	Name	Format	St	Usage	Example
3035	Party function code qualifier	an..3	**M**	SE = Seller BT:SELLER (BG-5) DESC:A group of business terms providing information about the Seller.	SE
C082	PARTY IDENTIFICATION DETAILS		**C**		
3039	Party identifier	an..35	**M**	BT:Seller identifier(BT-29) DESC:An identification of the Seller.	5790000434101
1131	Code list identification code	an..17	**C**	BT:Seller identifier identification scheme identifier(BT-29-1) DESC:The identification scheme identifier of the Seller identifier. Use ISO 6523 ICD list; e.g. 0088 = Global Location Number (GLN); 0060 = Data Universal Numbering System (D-U-N-S)	0088
C058	NAME AND ADDRESS		**N**		
3124	Name and address description	an..35	**N**	Not used	
C080	PARTY NAME		**R**		
3036	Party name	an..70	**M**	BT:Seller name(BT-27) DESC:The full formal name by which the Seller is registered in the national registry of legal entities or as a Taxable person or otherwise trades as a person or persons.	SellerCompany
3036	Party name	an..70	**C**	BT:Seller trading name(BT-28) DESC:A name by which the Seller is known, other than Seller name (also known as Business name).	SelCo
C059	STREET		**C**		
3042	Street and number or post office box identifier	an..35	**M**	BT:Seller address line 1(BT-35) DESC:The main address line in an address.	Hoofdstraat 4
3042	Street and number or post office box identifier	an..35	**C**	BT:Seller address line 2(BT-36) DESC:An additional address line in an address that can be used to give further details supplementing the main line.	Om de hoek
3042	Street and number or post office box identifier	an..35	**C**	BT:Seller address line 3(BT-162) DESC:An additional address line in an address that can be used to give further details supplementing the main line.	Om de hoek 2

Segment number: 44

EDIFACT			EAN		
Tag	Name	Format	St	Usage	Example
3164	City name	an..35	**C**	BT:Seller city(BT-37) DESC:The common name of the city, town or village, where the Seller address is located.	Grootstad
C819	COUNTRY SUB-ENTITY DETAILS		**C**		
3229	Country sub-entity name code	an..9	**N**	Not used	
1131	Code list identification code	an..17	**N**	Not used	
3055	Code list responsible agency code	an..3	**N**	Not used	
3228	Country sub-entity name	an..70	**R**	BT:Seller country subdivision(BT-39) DESC:The subdivision of a country.	Overijssel
3251	Postal identification code	an..17	**C**	BT:Seller post code(BT-38) DESC:The identifier for an addressable group of properties according to the relevant postal service.	54321
3207	Country name code	an..3	**R**	BT:Seller country code(BT-40) DESC:A code that identifies the country.	NL

Segment Notes:

BT:SELLER POSTAL ADDRESS (BG-5)
DESC:A group of business terms providing information about the address of the Seller.

Segment number: 45

SG2	- R	1 -	NAD-FII-SG3-SG5
FII	- C	1 -	Financial institution information

Function:

To identify an account and a related financial institution.

EDIFACT			EAN		
Tag	Name	Format	St	Usage	Example
3035	Party function code qualifier	an..3	**M**	RB = Receiving financial institution	RB
C078	ACCOUNT HOLDER IDENTIFICATION		**R**		
3194	Account holder identifier	an..35	**R**	BT:Payment account identifier(BT-84) DESC:A unique identifier of the financial payment account, at a payment service provider, to which payment should be made.	DK1212341234123412
3192	Account holder name	an..35	**C**	BT:Payment account name(BT-85) DESC:The name of the payment account, at a payment service provider, to which payment should be made.	SellerCompany
C088	INSTITUTION IDENTIFICATION		**C**		
3433	Institution name code	an..11	**R**	BT:Payment service provider identifier(BT-86) DESC:An identifier for the payment service provider where a payment account is located.	DNBANOKK

Segment Notes:

BT:CREDIT TRANSFER(BG-17)
DESC:A group of business terms to specify credit transfer payments.

Segment number: 46

SG2	- R	1 -	NAD-FII-SG3-SG5
SG3	- C	1 -	RFF
RFF	- M	1 -	Reference

Function:

To specify a reference.

EDIFACT			EAN		
Tag	Name	Format	St	Usage	Example
C506	REFERENCE		**M**		
1153	Reference code qualifier	an..3	**M**	GN = Government reference number BT:Seller legal registration identifier identification scheme identifier (BT-30-1). DESC:The identification scheme identifier of the Seller legal registration identifier.	GN
1154	Reference identifier	an..70	**R**	BT:Seller legal registration identifier (BT-30) DESC:An identifier issued by an official registrar that identifies the Seller as a legal entity or person.	NL16356706

Segment Notes:

Segment number: 47

SG2	- R	1	- NAD-FII-SG3-SG5
SG3	- C	1	- RFF
RFF	- M	1	- Reference

Function:

To specify a reference.

EDIFACT			EAN		
Tag	Name	Format	St	Usage	Example
C506	REFERENCE		**M**		
1153	Reference code qualifier	an..3	**M**	VA = VAT registration number	VA
1154	Reference identifier	an..70	**R**	BT:Seller VAT identifier (BT-31) DESC:The Seller's VAT identifier (also known as Seller VAT identification number).	NL16356706

Segment Notes:

Segment number: 48

SG2	- R	1 -	NAD-FII-SG3-SG5
SG3	- R	1 -	RFF
RFF	- M	1 -	Reference

Function:

To specify a reference.

EDIFACT			EAN		
Tag	Name	Format	St	Usage	Example
C506	REFERENCE		**M**		
1153	Reference code qualifier	an..3	**M**	AHP = Tax registration number	AHP
1154	Reference identifier	an..70	**R**	BT:Seller tax registration identifier (BT-32) DESC:The local identification (defined by the Seller's address) of the Seller for tax purposes or a reference that enables the Seller to state his registered tax status.	NL1635670 6

Segment Notes:

Segment number: 49

SG2	- R	1	- NAD-FII-SG3-SG5
SG5	- C	1	- CTA-COM
CTA	- M	1	- Contact information

Function:

To identify a person or a department to whom communication should be directed.

EDIFACT			EAN		
Tag	Name	Format	St	Usage	Example
3139	Contact function code	an..3	**R**	IC = Information contact	IC

Segment Notes:

Segment number: 50

SG2	- R	1 -	NAD-FII-SG3-SG5
SG5	- C	1 -	CTA-COM
COM	- C	5 -	Communication contact

Function:

To identify a communication number of a department or a person to whom communication should be directed.

EDIFACT			EAN		
Tag	Name	Format	St	Usage	Example
C076	COMMUNICATION CONTACT		**M**		
3148	Communication address identifier	an..512	**M**	BT:Seller electronic address(BT-34) DESC:Identifies the Seller's electronic address to which a business document may be delivered.	info@selco.nl
3155	Communication address code qualifier	an..3	**M**	EM = Electronic mail BT:Seller electronic address identification scheme identifier (BT-34-1) DESC:The identification scheme identifier of the Seller electronic address Use EM (= Email) as default; look at code list mapping for other values	EM

Segment Notes:

Segment number: 51

SG2	- R	1	- NAD-FII-SG3-SG5
SG5	- C	1	- CTA-COM
CTA	- M	1	- Contact information

Function:

To identify a person or a department to whom communication should be directed.

EDIFACT			EAN		
Tag	Name	Format	St	Usage	Example
3139	Contact function code	an..3	**R**	SU = Supplier contact BT:SELLER CONTACT (BG-6) DESC:A group of business terms providing contact information about the Seller.	SU
C056	DEPARTMENT OR EMPLOYEE DETAILS		**C**		
3413	Department or employee name code	an..17	**C**		
3412	Department or employee name	an..256	**R**	BT:Seller contact point(BT-41) DESC:A contact point for a legal entity or person.	Anthon Larsen

Segment Notes:

Segment number: 52

SG2	- R	1 -	NAD-FII-SG3-SG5
SG5	- C	1 -	CTA-COM
COM	- C	1 -	Communication contact

Function:

To identify a communication number of a department or a person to whom communication should be directed.

EDIFACT			EAN		
Tag	Name	Format	St	Usage	Example
C076	COMMUNICATION CONTACT		**M**		
3148	Communication address identifier	an..512	**M**	BT:Seller contact telephone number(BT-42) DESC:A phone number for the contact point.	3198989898
3155	Communication address code qualifier	an..3	**M**	TE = Telephone	TE

Segment Notes:

Segment number: 53

SG2	- R	1 -	NAD-FII-SG3-SG5
SG5	- C	1 -	CTA-COM
COM	- C	1 -	Communication contact

Function:

To identify a communication number of a department or a person to whom communication should be directed.

EDIFACT			EAN		
Tag	Name	Format	St	Usage	Example
C076	COMMUNICATION CONTACT		**M**		
3148	Communication address identifier	an..512	**M**	BT:Seller contact email address(BT-43) DESC:An e-mail address for the contact point.	anthon@selco.nl
3155	Communication address code qualifier	an..3	**M**	EM = Electronic mail	EM

Segment Notes:

Segment number: 54

SG2	- C	1	- NAD-SG3
NAD	- M	1	- Name and address

Function:

To specify the name/address and their related function, either by C082 only and/or unstructured by C058 or structured by C080 thru 3207.

EDIFACT			EAN		
Tag	Name	Format	St	Usage	Example
3035	Party function code qualifier	an..3	**M**	PE = Payee BT:PAYEE (BG-10) DESC:A group of business terms providing information about the Payee, i.e. the role that receives the payment.	PE
C082	PARTY IDENTIFICATION DETAILS		**C**		
3039	Party identifier	an..35	**M**	BT:Payee identifier(BT-60) DESC:An identifier for the Payee.	DK16356608
1131	Code list identification code	an..17	**C**	BT:Payee identifier identification scheme identifier(BT-60-1) DESC:The identification scheme identifier of the Payee identifier. Use ISO 6523 ICD list; e.g. 0088 = Global Location Number (GLN); 0060 = Data Universal Numbering System (D-U-N-S)	
C058	NAME AND ADDRESS		**N**		
3124	Name and address description	an..35	**N**	Not used	
C080	PARTY NAME		**R**		
3036	Party name	an..70	**M**	BT:Payee name(BT-59) DESC:The name of the Payee.	Dagober Duck

Segment Notes:

BT:SELLER POSTAL ADDRESS (BG-5)
DESC:A group of business terms providing information about the address of the Seller.

Segment number: 55

SG2	- C	1 -	NAD-SG3
SG3	- C	1 -	RFF
RFF	- M	1 -	Reference

Function:

To specify a reference.

EDIFACT			EAN		
Tag	Name	Format	St	Usage	Example
C506	REFERENCE		**M**		
1153	Reference code qualifier	an..3	**M**	GN = Government reference number BT:Payee legal registration identifier identification scheme identifier (BT-61-1). DESC:The identification scheme identifier of the Payee legal registration identifier.	GN
1154	Reference identifier	an..70	**R**	BT:Payee legal registration identifier (BT-61) DESC:An identifier issued by an official registrar that identifies the Payee as a legal entity or person.	DK16356608?'

Segment Notes:

Segment number: 56

SG2	- C	1	- NAD
NAD	- M	1	- Name and address

Function:

To specify the name/address and their related function, either by C082 only and/or unstructured by C058 or structured by C080 thru 3207.

EDIFACT			EAN		
Tag	Name	Format	St	Usage	Example
3035	Party function code qualifier	an..3	**M**	DP = Delivery party BT:DELIVERY INFORMATION (BG-13) DESC:A group of business terms providing information about where and when the goods and services invoiced are delivered.	DP
C082	PARTY IDENTIFICATION DETAILS		**C**		
3039	Party identifier	an..35	**M**	BT:Deliver to location identifier(BT-71) DESC:An identifier for the location at which the goods and services are delivered.	579000436068
1131	Code list identification code	an..17	**C**	BT:Deliver to location identifier identification scheme identifier (BT-71-1) DESC:The identification scheme identifier of the Deliver to location identifier Use ISO 6523 ICD list; e.g. 0088 = Global Location Number (GLN); 0060 = Data Universal Numbering System (D-U-N-S)	0088
C058	NAME AND ADDRESS		**N**		
3124	Name and address description	an..35	**N**	Not used	
C080	PARTY NAME		**C**		
3036	Party name	an..70	**M**	BT:Deliver to party name(BT-70) DESC:The name of the party to which the goods and services are delivered.	Logistic service ltd
C059	STREET		**C**		
3042	Street and number or post office box identifier	an..35	**M**	BT:Deliver to address line 1(BT-75) DESC:The main address line in an address.	Delivery street
3042	Street and number or post office box identifier	an..35	**C**	BT:Deliver to address line 2(BT-76) DESC:An additional address line in an address that can be used to give further details supplementing the main line.	Gate 15
3042	Street and number or post office box identifier	an..35	**C**	BT:Deliver to address line 3(BT-165) DESC:An additional address line in an address that can be used to give further details supplementing the main line.	Floor 2
3164	City name	an..35	**C**	BT:Deliver to city(BT-77) DESC:The common name of the city,	Delivery city

Segment number: 56

EDIFACT			EAN		
Tag	Name	Format	St	Usage	Example
				town or village, where the deliver to address is located.	
C819	COUNTRY SUB-ENTITY DETAILS		**C**		
3229	Country sub-entity name code	an..9	**C**		
1131	Code list identification code	an..17	**C**		
3055	Code list responsible agency code	an..3	**C**		
3228	Country sub-entity name	an..70	**R**	BT:Deliver to country subdivision(BT-79) DESC: The subdivision of a country.	Jutland
3251	Postal identification code	an..17	**C**	BT:Deliver to post code(BT-78) DESC: The identifier for an addressable group of properties according to the relevant postal service.	9000
3207	Country name code	an..3	**R**	BT:Deliver to country code(BT-80) DESC:A code that identifies the country.	DK

Segment Notes:

BT:DELIVER TO ADDRESS(BG-15)
DESC:A group of business terms providing information about the address to which goods and services invoiced were or are delivered.

Segment number: 57

SG2	- C	1 -	NAD-SG3
NAD	- M	1 -	Name and address

Function:

To specify the name/address and their related function, either by C082 only and/or unstructured by C058 or structured by C080 thru 3207.

EDIFACT			EAN		
Tag	Name	Format	St	Usage	Example
3035	Party function code qualifier	an..3	**M**	LC = Party declaring the Value Added Tax (VAT) BT:SELLER TAX REPRESENTATIVE POSTAL ADDRESS (BG-12) DESC:A group of business terms providing information about the postal address for the tax representative party.	LC
C082	PARTY IDENTIFICATION DETAILS		**N**		
3039	Party identifier	an..35	**N**	Not used	
C058	NAME AND ADDRESS		**N**		
3124	Name and address description	an..35	**N**	Not used	
C080	PARTY NAME		**R**		
3036	Party name	an..70	**M**	BT:Seller tax representative name(BT-62) DESC:The full name of the Seller's tax representative party.	Dick Panama
C059	STREET		**C**		
3042	Street and number or post office box identifier	an..35	**M**	BT:Tax representative address line 1(BT-64) DESC:The main address line in an address.	AnyStreet, buliding 1
3042	Street and number or post office box identifier	an..35	**C**	BT:Tax representative address line 2(BT-65) DESC:An additional address line in an address that can be used to give further details supplementing the main line.	6th floor
3042	Street and number or post office box identifier	an..35	**C**	BT:Tax representative address line 3(BT-164) DESC:An additional address line in an address that can be used to give further details supplementing the main line.	6th door
3164	City name	an..35	**C**	BT:Tax representative city(BT-66) DESC:The common name of the city, town or village, where the tax representative address is located.	Anytown
C819	COUNTRY SUB-ENTITY DETAILS		**C**		
3229	Country sub-entity name code	an..9	**C**		
1131	Code list identification code	an..17	**C**		

Segment number: 57

EDIFACT			EAN		
Tag	Name	Format	St	Usage	Example
3055	Code list responsible agency code	an..3	**C**		
3228	Country sub-entity name	an..70	**R**	BT:Tax representative country subdivision(BT-68) DESC:The subdivision of a country.	Jutland
3251	Postal identification code	an..17	**C**	BT:Tax representative post code(BT-67) DESC:The identifier for an addressable group of properties according to the relevant postal service.	101
3207	Country name code	an..3	**R**	BT:Tax representative country code(BT-69) DESC:A code that identifies the country.	DK

Segment Notes:

BT:SELLER TAX REPRESENTATIVE PARTY (BG-11)
DESC:A group of business terms providing information about the Seller's tax representative.

Segment number: 58

SG2	- C	1	- NAD-SG3
SG3	- R	1	- RFF
RFF	- M	1	- Reference

Function:

To specify a reference.

EDIFACT			EAN		
Tag	Name	Format	St	Usage	Example
C506	REFERENCE		**M**		
1153	Reference code qualifier	an..3	**M**	VA = VAT registration number	VA
1154	Reference identifier	an..70	**R**	BT:Seller tax representative VAT identifier (BT-63) DESC:The VAT identifier of the Seller's tax representative party.	DK16356609

Segment Notes:

Segment number: 59

SG7	- R	1	- CUX
CUX	- M	1	- Currencies

Function:

To specify currencies used in the transaction and relevant details for the rate of exchange.

EDIFACT			EAN		
Tag	Name	Format	St	Usage	Example
C504	CURRENCY DETAILS		**R**		
6347	Currency usage code qualifier	an..3	**M**	2 = Reference currency	2
6345	Currency identification code	an..3	**R**	BT:Invoice currency code(BT-5) DESC:The currency in which all Invoice amounts are given, except for the Total VAT amount in accounting currency. Use UN code list 6345	DKK

Segment Notes:

Segment number: 60

SG7	- C	1	- CUX
CUX	- M	1	- Currencies

Function:

To specify currencies used in the transaction and relevant details for the rate of exchange.

EDIFACT			EAN		
Tag	Name	Format	St	Usage	Example
C504	CURRENCY DETAILS		**R**		
6347	Currency usage code qualifier	an..3	**M**	6 = Information Currency	6
6345	Currency identification code	an..3	**R**	BT:VAT accounting currency code(BT-6) DESC:The currency used for VAT accounting and reporting purposes as accepted or required in the country of the Seller. Use UN code list 6345	EUR

Segment Notes:

Segment number: 61

SG8	- C	1	- PAT-DTM-PAI
PAT	- M	1	- Payment terms basis

Function:

To specify the payment terms basis.

Notes:
1. This segment will be removed effective with directory D.02B.

EDIFACT			EAN		
Tag	Name	Format	St	Usage	Example
4279	Payment terms type code qualifier	an..3	**M**	1 = Basic BT:PAYMENT INSTRUCTIONS(BG-16) DESC:A group of business terms providing information about the payment.	1

Segment Notes:

Segment number: 62

SG8	- C	1	- PAT-DTM-PAI
DTM	- C	1	- Date/time/period

Function:

To specify date, and/or time, or period.

EDIFACT			EAN		
Tag	Name	Format	St	Usage	Example
C507	DATE/TIME/PERIOD		**M**		
2005	Date or time or period function code qualifier	an..3	**M**	13 = Terms net due date	13
2380	Date or time or period value	an..35	**R**	BT:Payment due date (BT-9) DESC:The date when the payment is due.	2013-05-10

Segment Notes:

Segment number: 63

SG8	- C	1	- PAT-DTM-PAI
PAI	- R	1	- Payment instructions

Function:

To specify the instructions for payment.

EDIFACT			EAN		
Tag	Name	Format	St	Usage	Example
C534	PAYMENT INSTRUCTION DETAILS		**M**		
4439	Payment conditions code	an..3	**C**		
4431	Payment guarantee means code	an..3	**C**		
4461	Payment means code	an..3	**R**	BT:Payment means type codeS(BT-81) DESC:The means, expressed as code, for how a payment is expected to be or has been settled.	30

Segment Notes:

Segment number: 64

SG16	- C	9999	-	ALC-SG19-SG20-SG22
ALC	- M	1	-	Allowance or charge

Function:

To identify allowance or charge details.

EDIFACT			EAN		
Tag	Name	Format	St	Usage	Example
5463	Allowance or charge code qualifier	an..3	**M**	A = Allowance BT:DOCUMENT LEVEL ALLOWANCES(BG-20) DESC:A group of business terms providing information about allowances applicable to the Invoice as a whole.	A
C552	ALLOWANCE/CHARGE INFORMATION		**C**		
1230	Allowance or charge identifier	an..35	**C**	BT:Document level allowance reason(BT-97) DESC:The reason for the document level allowance, expressed as text.	Loyal customer
5189	Allowance or charge identification code	an..3	**C**	BT:Document level allowance reason code (BT-98) DESC:The reason for the document level allowance, expressed as a code.	42

Segment Notes:

Segment number: 65

SG16	- C	9999	-	ALC-SG19-SG20-SG22
SG19	- C	1	-	PCD
PCD	- M	1	-	Percentage details

Function:

To specify percentage information.

EDIFACT			EAN		
Tag	Name	Format	St	Usage	Example
C501	PERCENTAGE DETAILS		**M**		
5245	Percentage type code qualifier	an..3	**M**	1 = Allowance	1
5482	Percentage	n..10	**R**	BT:Document level allowance percentage(BT-94) DESC:The percentage that may be used, in conjunction with the document level allowance base amount, to calculate the document level allowance amount.	10

Segment Notes:

Segment number: 66

SG16	- C	9999	-	ALC-SG19-SG20-SG22
SG20	- R	1	-	MOA
MOA	- M	1	-	Monetary amount

Function:

To specify a monetary amount.

EDIFACT			EAN		
Tag	Name	Format	St	Usage	Example
C516	MONETARY AMOUNT		**M**		
5025	Monetary amount type code qualifier	an..3	**M**	204 = Allowance amount	204
5004	Monetary amount	n..35	**R**	BT:Document level allowance amount(BT-92) DESC:The amount of an allowance, without VAT.	150.00

Segment Notes:

Segment number: 67

SG16	- C	9999	-	ALC-SG19-SG20-SG22
SG20	- C	1	-	MOA
MOA	- M	1	-	Monetary amount

Function:

To specify a monetary amount.

EDIFACT			EAN		
Tag	Name	Format	St	Usage	Example
C516	MONETARY AMOUNT		**M**		
5025	Monetary amount type code qualifier	an..3	**M**	25 = Charge/allowance basis	25
5004	Monetary amount	n..35	**R**	BT:Document level allowance base amount(BT-93) DESC:The base amount that may be used, in conjunction with the document level allowance percentage, to calculate the document level allowance amount.	1500.00

Segment Notes:

Segment number: 68

SG16	- C	9999	- ALC-SG19-SG20-SG22
SG22	- C	1	- TAX
TAX	- M	1	- Duty/tax/fee details

Function:

To specify relevant duty/tax/fee information.

EDIFACT			EAN		
Tag	Name	Format	St	Usage	Example
5283	Duty or tax or fee function code qualifier	an..3	**M**	7 = Tax	7
C241	DUTY/TAX/FEE TYPE		**R**		
5153	Duty or tax or fee type name code	an..3	**R**	VAT = Value added tax	VAT
C533	DUTY/TAX/FEE ACCOUNT DETAIL		**N**		
5289	Duty or tax or fee account code	an..6	**N**	Not used	
5286	Duty or tax or fee assessment basis value	an..15	**C**		
C243	DUTY/TAX/FEE DETAIL		**C**		
5279	Duty or tax or fee rate code	an..7	**C**		
1131	Code list identification code	an..17	**C**		
3055	Code list responsible agency code	an..3	**C**		
5278	Duty or tax or fee rate	an..17	**R**	BT:Document level allowance VAT rate(BT-96) DESC:The VAT rate, represented as percentage that applies to the document level allowance.	25
5305	Duty or tax or fee category code	an..3	**R**	BT:Document level allowance VAT category code(BT-95) DESC:A coded identification of what VAT category applies to the document level allowance. S = Standard rate Z = Zero rated goods E = Exempt from tax AE = VAT Reverse Charge K = VAT exempt for EEA intra-community supply of goods and services G = Free export item, tax not charged O = Services outside scope of tax L = Canary Islands general indirect tax M = Tax for production, services and importation in Ceuta and Melilla	S

Segment Notes:

Segment number: 69

SG16	- C	9999	- ALC-SG19-SG20-SG22
ALC	- M	1	- Allowance or charge

Function:

To identify allowance or charge details.

EDIFACT			EAN		
Tag	Name	Format	St	Usage	Example
5463	Allowance or charge code qualifier	an..3	**M**	C = Charge BT:DOCUMENT LEVEL CHARGES(BG-21) DESC:A group of business terms providing information about charges and taxes other than VAT, applicable to the Invoice as a whole.	C
C552	ALLOWANCE/CHARGE INFORMATION		**C**		
1230	Allowance or charge identifier	an..35	**R**	BT:Document level charge reason(BT-104) DESC:The reason for the document level charge, expressed as text.	Packaging
4471	Settlement means code	an..3	**C**		
1227	Calculation sequence code	an..3	**C**		
C214	SPECIAL SERVICES IDENTIFICATION		**C**		
7161	Special service description code	an..3	**R**	BT:Document level charge reason code(BT-105) DESC:The reason for the document level charge, expressed as a code.	ABL

Segment Notes:

Segment number: 70

SG16	- C	9999	-	ALC-SG19-SG20-SG22
SG19	- C	1	-	PCD
PCD	- M	1	-	Percentage details

Function:

To specify percentage information.

EDIFACT			EAN		
Tag	Name	Format	St	Usage	Example
C501	PERCENTAGE DETAILS		**M**		
5245	Percentage type code qualifier	an..3	**M**	2 = Charge	2
5482	Percentage	n..10	**C**	BT:Document level charge percentage(BT-101) DESC:The percentage that may be used, in conjunction with the document level charge base amount, to calculate the document level charge amount.	10

Segment Notes:

Segment number: 71

SG16	- C	9999	-	ALC-SG19-SG20-SG22
SG20	- R	1	-	MOA
MOA	- M	1	-	Monetary amount

Function:

To specify a monetary amount.

EDIFACT			EAN		
Tag	Name	Format	St	Usage	Example
C516	MONETARY AMOUNT		**M**		
5025	Monetary amount type code qualifier	an..3	**M**	23 = Charge amount	23
5004	Monetary amount	n..35	**R**	BT:Document level charge amount(BT-99) DESC:The amount of a charge, without VAT.	150.00

Segment Notes:

Segment number: 72

SG16	- C	9999	-	ALC-SG19-SG20-SG22
SG20	- C	1	-	MOA
MOA	- M	1	-	Monetary amount

Function:

To specify a monetary amount.

EDIFACT			EAN		
Tag	Name	Format	St	Usage	Example
C516	MONETARY AMOUNT		**M**		
5025	Monetary amount type code qualifier	an..3	**M**	25 = Charge/allowance basis	25
5004	Monetary amount	n..35	**R**	BT:Document level charge base amount(BT-100) DESC:The base amount that may be used, in conjunction with the document level charge percentage, to calculate the document level charge amount.	1500.00

Segment Notes:

Segment number: 73

SG16	- C	9999	- ALC-SG19-SG20-SG22
SG22	- C	5	- TAX
TAX	- M	1	- Duty/tax/fee details

Function:

To specify relevant duty/tax/fee information.

EDIFACT			EAN		
Tag	Name	Format	St	Usage	Example
5283	Duty or tax or fee function code qualifier	an..3	**M**	7 = Tax	7
C241	DUTY/TAX/FEE TYPE		**R**		
5153	Duty or tax or fee type name code	an..3	**R**	VAT = Value added tax	VAT
C533	DUTY/TAX/FEE ACCOUNT DETAIL		**N**		
5289	Duty or tax or fee account code	an..6	**N**	Not used	
5286	Duty or tax or fee assessment basis value	an..15	**C**		
C243	DUTY/TAX/FEE DETAIL		**C**		
5279	Duty or tax or fee rate code	an..7	**C**		
1131	Code list identification code	an..17	**C**		
3055	Code list responsible agency code	an..3	**C**		
5278	Duty or tax or fee rate	an..17	**R**	BT:Document level charge VAT rate(BT-103) DESC:The VAT rate, represented as percentage that applies to the document level charge.	25
5305	Duty or tax or fee category code	an..3	**R**	BT:Document level charge VAT category code(BT-102) DESC:A coded identification of what VAT category applies to the document level charge. S = Standard rate Z = Zero rated goods E = Exempt from tax AE = VAT Reverse Charge K = VAT exempt for EEA intra-community supply of goods and services G = Free export item, tax not charged O = Services outside scope of tax L = Canary Islands general indirect tax M = Tax for production, services and importation in Ceuta and Melilla	S

Segment Notes:

Segment number: 74

SG26	- R	9999999	-	LIN-PIA-IMD-QTY-ALI-DTM-FTX-SG27-SG29-SG30-SG34-SG39
LIN	- M	1	-	Line item

Function:

To identify a line item and configuration.

EDIFACT			EAN		
Tag	Name	Format	St	Usage	Example
1082	Line item identifier	an..6	**R**	BT:Invoice line identifier(BT-126) DESC:A unique identifier for the individual line within the Invoice.	1
1229	Action request/notification description code	an..3	**C**		
C212	ITEM NUMBER IDENTIFICATION		**C**		
7140	Item identifier	an..35	**R**	BT:Item standard identifier(BT-157) DESC:An item identifier based on a registered scheme.	1234567890128
7143	Item type identification code	an..3	**R**	BT:Item standard identifier identification scheme identifier (BT-157-1) DESC:The identification scheme identifier of the Item standard identifier Use UN code list 7143	SRV

Segment Notes:

Segment number: 75

SG26	- R	9999999	-	LIN-PIA-IMD-QTY-ALI-DTM-FTX-SG27-SG29-SG30-SG34-SG39
PIA	- C	1	-	Additional product id

Function:

To specify additional or substitutional item identification codes.

EDIFACT			EAN		
Tag	Name	Format	St	Usage	Example
4347	Product identifier code qualifier	an..3	**M**	5 = Product identification	5
C212	ITEM NUMBER IDENTIFICATION		**M**		
7140	Item identifier	an..35	**R**	BT:Item Seller's identifier(BT-155) DESC:An identifier, assigned by the Seller, for the item.	JB007
7143	Item type identification code	an..3	**R**	SA = Supplier's article number	SA

Segment Notes:

Segment number: 76

SG26	- R	9999999	-	LIN-PIA-IMD-QTY-ALI-DTM-FTX-SG27-SG29-SG30-SG34-SG39
PIA	- C	1	-	Additional product id

Function:

To specify additional or substitutional item identification codes.

EDIFACT			EAN		
Tag	Name	Format	St	Usage	Example
4347	Product identifier code qualifier	an..3	**M**	5 = Product identification	5
C212	ITEM NUMBER IDENTIFICATION		**M**		
7140	Item identifier	an..35	**R**	BT:Item Buyer's identifier(BT-156) DESC:An identifier, assigned by the Buyer, for the item.	BUY123
7143	Item type identification code	an..3	**R**	IN = Buyer's item number	IN

Segment Notes:

Segment number: 77

SG26	- R	9999999	-	LIN-PIA-IMD-QTY-ALI-DTM-FTX-SG27-SG29-SG30-SG34-SG39
PIA	- C	25	-	Additional product id

Function:

To specify additional or substitutional item identification codes.

EDIFACT			EAN		
Tag	Name	Format	St	Usage	Example
4347	Product identifier code qualifier	an..3	**M**	1 = Additional identification	1
C212	ITEM NUMBER IDENTIFICATION		**M**		
7140	Item identifier	an..35	**R**	BT:Item classification identifier(BT-158) DESC:A code for classifying the item by its type or nature.	123444321
7143	Item type identification code	an..3	**R**	BT:Item classification identifier identification scheme identifier (BT-158-1) DESC:The identification scheme identifier of the Item classification identifier BT:Scheme version identifer (BT-158-2) DESC:The version of the identification scheme.	ZZZ

Segment Notes:

Segment number: 78

SG26	- R	9999999	- LIN-PIA-IMD-QTY-ALI-DTM-FTX-SG27-SG29-SG30-SG34-SG39
IMD	- R	1	- Item description

Function:

To describe an item in either an industry or free format.

EDIFACT			EAN		
Tag	Name	Format	St	Usage	Example
7077	Description format code	an..3	**R**	F = Free-form	F
C272	ITEM CHARACTERISTIC		**N**		
7081	Item characteristic code	an..3	**N**	Not used	
C273	ITEM DESCRIPTION		**R**		
7009	Item description code	an..17	**C**		
1131	Code list identification code	an..17	**C**		
3055	Code list responsible agency code	an..3	**C**		
7008	Item description	an..256	**R**	BT:Item name(BT-153) DESC:A name for an item.	Printing paper

Segment Notes:

Segment number: 79

SG26	- R	9999999	- LIN-PIA-IMD-QTY-ALI-DTM-FTX-SG27-SG29-SG30-SG34-SG39
IMD	- C	1	- Item description

Function:

To describe an item in either an industry or free format.

EDIFACT			EAN		
Tag	Name	Format	St	Usage	Example
7077	Description format code	an..3	**R**	A = Free-form long description	A
C272	ITEM CHARACTERISTIC		**N**		
7081	Item characteristic code	an..3	**N**	Not used	
C273	ITEM DESCRIPTION		**R**		
7009	Item description code	an..17	**N**	Not used	
1131	Code list identification code	an..17	**N**	Not used	
3055	Code list responsible agency code	an..3	**N**	Not used	
7008	Item description	an..256	**R**	BT:Item description(BT-154) DESC:A description for an item.	printing paper, 2mm

Segment Notes:

Segment number: 80

SG26	- R	9999999	-	LIN-PIA-IMD-QTY-ALI-DTM-FTX-SG27-SG29-SG30-SG34-SG39
QTY	- R	1	-	Quantity

Function:

To specify a pertinent quantity.

EDIFACT			EAN		
Tag	Name	Format	St	Usage	Example
C186	QUANTITY DETAILS		**M**		
6063	Quantity type code qualifier	an..3	**M**	47 = Invoiced quantity	47
6060	Quantity	an..35	**R**	BT:Invoiced quantity(BT-129) DESC:The quantity of items (goods or services) that is charged in the Invoice line.	1000
6411	Measurement unit code	an..8	**R**	BT:Invoiced quantity unit of measure(BT-130) DESC:The unit of measure that applies to the invoiced quantity. Usage of Rec 20 with Rec 21 extensions is allowed as defined in usage note 2.a) of Rec 20	C62

Segment Notes:

Segment number: 81

SG26	- R	9999999	-	LIN-PIA-IMD-QTY-ALI-DTM-FTX-SG27-SG29-SG30-SG34-SG39
ALI	- C	1	-	Additional information

Function:

To indicate that special conditions due to the origin, customs preference, fiscal or commercial factors are applicable.

EDIFACT			EAN		
Tag	Name	Format	St	Usage	Example
3239	Country of origin name code	an..3	**R**	BT:Item country of origin(BT-159) DESC:The code identifying the country from which the item originates.	NL

Segment Notes:

Segment number: 82

SG26	- R	9999999	- LIN-PIA-IMD-QTY-ALI-DTM-FTX-SG27-SG29-SG30-SG34-SG39
DTM	- C	1	- Date/time/period

Function:

To specify date, and/or time, or period.

EDIFACT			EAN		
Tag	Name	Format	St	Usage	Example
C507	DATE/TIME/PERIOD		**M**		
2005	Date or time or period function code qualifier	an..3	**M**	167 = Charge period start date BT:INVOICE LINE PERIOD(BG-26) DESC:A group of business terms providing information about the period relevant for the Invoice line.	167
2380	Date or time or period value	an..35	**R**	BT:Invoice line period start date(BT-134) DESC:The date when the Invoice period for this Invoice line starts.	2013-03-10

Segment Notes:

Segment number: 83

SG26	- R	9999999	-	LIN-PIA-IMD-QTY-ALI-DTM-FTX-SG27-SG29-SG30-SG34-SG39
DTM	- C	1	-	Date/time/period

Function:

To specify date, and/or time, or period.

EDIFACT			EAN		
Tag	Name	Format	St	Usage	Example
C507	DATE/TIME/PERIOD		**M**		
2005	Date or time or period function code qualifier	an..3	**M**	168 = Charge period end date BT:INVOICE LINE PERIOD(BG-26) DESC:A group of business terms providing information about the period relevant for the Invoice line.	168
2380	Date or time or period value	an..35	**R**	BT:Invoice line period end date(BT-135) DESC:The date when the Invoice period for this Invoice line ends.	2013-04-10

Segment Notes:

Segment number: 84

SG26	- R	9999999	-	LIN-PIA-IMD-QTY-ALI-DTM-FTX-SG27-SG29-SG30-SG34-SG39
FTX	- C	1	-	Free text

Function:

To provide free form or coded text information.

EDIFACT			EAN		
Tag	Name	Format	St	Usage	Example
4451	Text subject code qualifier	an..3	**M**	ACB = Additional information	ACB
4453	Free text function code	an..3	**N**	Not used	
C107	TEXT REFERENCE		**N**		
4441	Free text value code	an..17	**N**	Not used	
C108	TEXT LITERAL		**R**		
4440	Free text value	an..512	**M**	BT:Invoice line noter(BT-127) DESC:A textual note that gives unstructured information that is relevant to the Invoice line.	first line

Segment Notes:

Segment number: 85

SG26	- R	9999999	- LIN-PIA-IMD-QTY-ALI-DTM-FTX-SG27-SG29-SG30-SG34-SG39
FTX	- C	99	- Free text

Function:

To provide free form or coded text information.

EDIFACT			EAN		
Tag	Name	Format	St	Usage	Example
4451	Text subject code qualifier	an..3	**M**	ACF = Additional attribute information	ACF
4453	Free text function code	an..3	**N**	Not used	
C107	TEXT REFERENCE		**N**		
4441	Free text value code	an..17	**N**	Not used	
C108	TEXT LITERAL		**R**		
4440	Free text value	an..512	**M**	BT:Item attribute name(BT-160) DESC:The name of the attribute or property of the item.	Thickness
4440	Free text value	an..512	**R**	BT:Item attribute value(BT-161) DESC:The value of the attribute or property of the item.	2 mm

Segment Notes:

BT:ITEM ATTRIBUTES(BG-32)
DESC:A group of business terms providing information about properties of the goods and services invoiced.

Segment number: 86

SG26	- R	9999999	-	LIN-PIA-IMD-QTY-ALI-DTM-FTX-SG27-SG29-SG30-SG34-SG39
SG27	- R	1	-	MOA
MOA	- M	1	-	Monetary amount

Function:

To specify a monetary amount.

EDIFACT			EAN		
Tag	Name	Format	St	Usage	Example
C516	MONETARY AMOUNT		**M**		
5025	Monetary amount type code qualifier	an..3	**M**	203 = Line item amount	203
5004	Monetary amount	n..35	**R**	BT:Invoice line net amount(BT-131) DESC:The total amount of the Invoice line.	1000.00

Segment Notes:

Segment number: 87

SG26	- R	9999999	-	LIN-PIA-IMD-QTY-ALI-DTM-FTX-SG27-SG29-SG30-SG34-SG39
SG27	- C	1	-	MOA
MOA	- M	1	-	Monetary amount

Function:

To specify a monetary amount.

EDIFACT			EAN		
Tag	Name	Format	St	Usage	Example
C516	MONETARY AMOUNT		**M**		
5025	Monetary amount type code qualifier	an..3	**M**	38 = Invoice item amount	38
5004	Monetary amount	n..35	**R**	BT:Invoice line net amount including VAT (NBT-031) DESC:The total amount of the Invoice line including VAT.	1250.00

Segment Notes:

Segment number: 88

SG26	- R	9999999	-	LIN-PIA-IMD-QTY-ALI-DTM-FTX-SG27-SG29-SG30-SG34-SG39
SG29	- R	1	-	PRI
PRI	- M	1	-	Price details

Function:

To specify price information.

EDIFACT			EAN		
Tag	Name	Format	St	Usage	Example
C509	PRICE INFORMATION		**R**		
5125	Price code qualifier	an..3	**M**	AAA = Calculation net BT:PRICE DETAILS(BG-29) DESC:A group of business terms providing information about the price applied for the goods and services invoiced on the Invoice line.	AAA
5118	Price amount	n..15	**R**	BT:Item net price(BT-146) DESC:The price of an item, exclusive of VAT, after subtracting item price discount.	1.0000
5375	Price type code	an..3	**C**		
5387	Price specification code	an..3	**C**		
5284	Unit price basis value	n..9	**C**	BT:Item price base quantity(BT-149) DESC:The number of item units to which the price applies.	1
6411	Measurement unit code	an..8	**C**	BT:Item price base quantity unit of measure code(BT-150) DESC:The unit of measure that applies to the Item price base quantity.	C62

Segment Notes:

Segment number: 89

SG26	- R	9999999	-	LIN-PIA-IMD-QTY-ALI-DTM-FTX-SG27-SG29-SG30-SG34-SG39
SG29	- C	1	-	PRI
PRI	- M	1	-	Price details

Function:

To specify price information.

EDIFACT			EAN		
Tag	Name	Format	St	Usage	Example
C509	PRICE INFORMATION		**R**		
5125	Price code qualifier	an..3	**M**	AAB = Calculation gross BT:PRICE DETAILS(BG-29) DESC:A group of business terms providing information about the price applied for the goods and services invoiced on the Invoice line.	AAB
5118	Price amount	n..15	**R**	BT:Item gross price(BT-148) DESC:The unit price, exclusive of VAT, before subtracting Item price discount.	1.1000
5375	Price type code	an..3	**C**		
5387	Price specification code	an..3	**C**		
5284	Unit price basis value	n..9	**C**	BT:Item price base quantity(BT-149) DESC:The number of item units to which the price applies.	1
6411	Measurement unit code	an..8	**C**	BT:Item price base quantity unit of measure code(BT-150) DESC:The unit of measure that applies to the Item price base quantity.	C62

Segment Notes:

Segment number: 90

SG26	- R	9999999	-	LIN-PIA-IMD-QTY-ALI-DTM-FTX-SG27-SG29-SG30-SG34-SG39
SG30	- C	1	-	RFF
RFF	- M	1	-	Reference

Function:

To specify a reference.

EDIFACT			EAN		
Tag	Name	Format	St	Usage	Example
C506	REFERENCE		**M**		
1153	Reference code qualifier	an..3	**M**	AVE = Metering point DESC:An identifier for an object on which the invoice line is based, given by the Seller. BT:Invoice line object identifier identification scheme identifier (BT-128-1)	AVE
1154	Reference identifier	an..70	**R**	BT:Invoice line object identifier(BT-128) DESC:An identifier for an object on which the invoice line is based, given by the Seller.	Object 2

Segment Notes:

Segment number: 91

SG26	- R	9999999	-	LIN-PIA-IMD-QTY-ALI-DTM-FTX-SG27-SG29-SG30-SG34-SG39
SG30	- C	1	-	RFF
RFF	- M	1	-	Reference

Function:

To specify a reference.

EDIFACT			EAN		
Tag	Name	Format	St	Usage	Example
C506	REFERENCE		**M**		
1153	Reference code qualifier	an..3	**M**	ON = Order number (buyer) DESC:An identifier for an object on which the invoice line is based, given by the Seller. BT:Invoice line object identifier identification scheme identifier (BT-128-1)	ON
1154	Reference identifier	an..70	**C**		
1156	Document line identifier	an..6	**R**	BT:Referenced purchase order line reference(BT-132) DESC:An identifier for a referenced line within a purchase order, issued by the Buyer.	1

Segment Notes:

Segment number: 92

SG26	- R	9999999	-	LIN-PIA-IMD-QTY-ALI-DTM-FTX-SG27-SG29-SG30-SG34-SG39
SG30	- C	1	-	RFF
RFF	- M	1	-	Reference

Function:

To specify a reference.

EDIFACT			EAN		
Tag	Name	Format	St	Usage	Example
C506	REFERENCE		**M**		
1153	Reference code qualifier	an..3	**M**	AWQ = Accounting entry	AWQ
1154	Reference identifier	an..70	**R**	BT:Invoice line Buyer accounting reference (BT-133) DESC:A textual value that specifies where to book the relevant data into the Buyer's financial accounts.	ACC7654

Segment Notes:

Segment number: 93

SG26	- R	9999999	-	LIN-PIA-IMD-QTY-ALI-DTM-FTX-SG27-SG29-SG30-SG34-SG39
SG34	- R	1	-	TAX-MOA
TAX	- M	1	-	Duty/tax/fee details

Function:

To specify relevant duty/tax/fee information.

EDIFACT			EAN		
Tag	Name	Format	St	Usage	Example
5283	Duty or tax or fee function code qualifier	an..3	**M**	7 = Tax	7
C241	DUTY/TAX/FEE TYPE		**R**		
5153	Duty or tax or fee type name code	an..3	**R**	VAT = Value added tax	VAT
C533	DUTY/TAX/FEE ACCOUNT DETAIL		**N**		
5289	Duty or tax or fee account code	an..6	**N**	Not used	
5286	Duty or tax or fee assessment basis value	an..15	**C**		
C243	DUTY/TAX/FEE DETAIL		**C**		
5279	Duty or tax or fee rate code	an..7	**C**		
1131	Code list identification code	an..17	**C**		
3055	Code list responsible agency code	an..3	**C**		
5278	Duty or tax or fee rate	an..17	**R**	BT:Invoiced item VAT rate (BT-152) DESC:The VAT rate, represented as percentage that applies to the invoiced item.	25
5305	Duty or tax or fee category code	an..3	**R**	BT:Invoiced item VAT category code (BT-151) DESC:The VAT category code for the invoiced item. S = Standard rate Z = Zero rated goods E = Exempt from tax AE = VAT Reverse Charge K = VAT exempt for EEA intra-community supply of goods and services G = Free export item, tax not charged O = Services outside scope of tax L = Canary Islands general indirect tax M = Tax for production, services and importation in Ceuta and Melilla	S

Segment Notes:

Segment number: 94

SG26	- R	9999999	-	LIN-PIA-IMD-QTY-ALI-DTM-FTX-SG27-SG29-SG30-SG34-SG39
SG34	- R	1	-	TAX-MOA
MOA	- C	2	-	Monetary amount

Function:

To specify a monetary amount.

EDIFACT			EAN		
Tag	Name	Format	St	Usage	Example
C516	MONETARY AMOUNT		**M**		
5025	Monetary amount type code qualifier	an..3	**M**	125 = Taxable amount	125
5004	Monetary amount	n..35	**R**	BT:Invoice line VAT category taxable amount(NBT-032) DESC:Sum of all taxable amounts on line item level.	1000.00

Segment Notes:

Segment number: 95

SG26	- R	9999999	-	LIN-PIA-IMD-QTY-ALI-DTM-FTX-SG27-SG29-SG30-SG34-SG39
SG34	- R	1	-	TAX-MOA
MOA	- C	2	-	Monetary amount

Function:

To specify a monetary amount.

EDIFACT			EAN		
Tag	Name	Format	St	Usage	Example
C516	MONETARY AMOUNT		**M**		
5025	Monetary amount type code qualifier	an..3	**M**	124 = Tax amount	124
5004	Monetary amount	n..35	**R**	BT:Invoice line VAT category tax amount (NBT-033) DESC:The total VAT amount on line item level.	250.00

Segment Notes:

Segment number: 96

SG26	- R	9999999	-	LIN-PIA-IMD-QTY-ALI-DTM-FTX-SG27-SG29-SG30-SG34-SG39
SG39	- C	30	-	ALC-SG41-SG42
ALC	- M	1	-	Allowance or charge

Function:

To identify allowance or charge details.

EDIFACT			EAN		
Tag	Name	Format	St	Usage	Example
5463	Allowance or charge code qualifier	an..3	**M**	A = Allowance BT:INVOICE LINE ALLOWANCES(BG-27) DESC:A group of business terms providing information about allowances applicable to the individual Invoice line.	A
C552	ALLOWANCE/CHARGE INFORMATION		**C**		
1230	Allowance or charge identifier	an..35	**C**	BT:Invoice line allowance reason(BT-139) DESC:The reason for the Invoice line allowance, expressed as text.	Loyal customer
5189	Allowance or charge identification code	an..3	**C**	BT:Invoice line allowance reason code(BT-140) DESC:The reason for the Invoice line allowance, expressed as a code.	95

Segment Notes:

Segment number: 97

SG26	- R	9999999	-	LIN-PIA-IMD-QTY-ALI-DTM-FTX-SG27-SG29-SG30-SG34-SG39
SG39	- C	30	-	ALC-SG41-SG42
SG41	- C	1	-	PCD
PCD	- M	1	-	Percentage details

Function:

To specify percentage information.

EDIFACT			EAN		
Tag	Name	Format	St	Usage	Example
C501	PERCENTAGE DETAILS		**M**		
5245	Percentage type code qualifier	an..3	**M**	1 = Allowance	1
5482	Percentage	n..10	**R**	BT:Invoice line allowance percentage(BT-138) DESC:The percentage that may be used, in conjunction with the Invoice line allowance base amount, to calculate the Invoice line allowance amount.	10

Segment Notes:

Segment number: 98

SG26	- R	9999999	-	LIN-PIA-IMD-QTY-ALI-DTM-FTX-SG27-SG29-SG30-SG34-SG39
SG39	- C	30	-	ALC-SG41-SG42
SG42	- R	2	-	MOA
MOA	- M	1	-	Monetary amount

Function:

To specify a monetary amount.

EDIFACT			EAN		
Tag	Name	Format	St	Usage	Example
C516	MONETARY AMOUNT		**M**		
5025	Monetary amount type code qualifier	an..3	**M**	204 = Allowance amount	204
5004	Monetary amount	n..35	**R**	BT:Invoice line allowance amount(BT-136) DESC:The amount of an allowance, without VAT.	100.00

Segment Notes:

Segment number: 99

SG26	- R	9999999	-	LIN-PIA-IMD-QTY-ALI-DTM-FTX-SG27-SG29-SG30-SG34-SG39
SG39	- C	30	-	ALC-SG41-SG42
SG42	- C	2	-	MOA
MOA	- M	1	-	Monetary amount

Function:

To specify a monetary amount.

EDIFACT			EAN		
Tag	Name	Format	St	Usage	Example
C516	MONETARY AMOUNT		**M**		
5025	Monetary amount type code qualifier	an..3	**M**	25 = Charge/allowance basis	25
5004	Monetary amount	n..35	**R**	BT:Invoice line allowance base amount(BT-137) DESC:The base amount that may be used, in conjunction with the Invoice line allowance percentage, to calculate the Invoice line allowance amount.	1000.00

Segment Notes:

Segment number: 100

SG26	- R	9999999	-	LIN-PIA-IMD-QTY-ALI-DTM-FTX-SG27-SG29-SG30-SG34-SG39
SG39	- C	30	-	ALC-SG42
ALC	- M	1	-	Allowance or charge

Function:

To identify allowance or charge details.

EDIFACT			EAN		
Tag	Name	Format	St	Usage	Example
5463	Allowance or charge code qualifier	an..3	**M**	A = Allowance BT:INVOICE LINE ALLOWANCES(BG-27) DESC:A group of business terms providing information about allowances applicable to the individual Invoice line.	A

Segment Notes:

Segment number: 101

SG26	- R	9999999	-	LIN-PIA-IMD-QTY-ALI-DTM-FTX-SG27-SG29-SG30-SG34-SG39
SG39	- C	30	-	ALC-SG42
SG42	- C	1	-	MOA
MOA	- M	1	-	Monetary amount

Function:

To specify a monetary amount.

EDIFACT			EAN		
Tag	Name	Format	St	Usage	Example
C516	MONETARY AMOUNT		**M**		
5025	Monetary amount type code qualifier	an..3	**M**	509 = Unit allowance amount	509
5004	Monetary amount	n..35	**R**	BT:Item price discount(BT-147) DESC:The total discount subtracted from the Item gross price to calculate the Item net price.	0.1000

Segment Notes:

Segment number: 102

SG26	- R	9999999	-	LIN-PIA-IMD-QTY-ALI-DTM-FTX-SG27-SG29-SG30-SG34-SG39
SG39	- C	30	-	ALC-SG41-SG42
ALC	- M	1	-	Allowance or charge

Function:

To identify allowance or charge details.

EDIFACT			EAN		
Tag	Name	Format	St	Usage	Example
5463	Allowance or charge code qualifier	an..3	**M**	C = Charge BT:INVOICE LINE CHARGES(BG-28) DESC:A group of business terms providing information about charges and taxes other than VAT applicable to the individual Invoice line.	C
C552	ALLOWANCE/CHARGE INFORMATION		**C**		
1230	Allowance or charge identifier	an..35	**R**	BT:Invoice line charge reason(BT-144) DESC:The reason for the Invoice line charge, expressed as text.	Packaging
4471	Settlement means code	an..3	**C**		
1227	Calculation sequence code	an..3	**C**		
C214	SPECIAL SERVICES IDENTIFICATION		**C**		
7161	Special service description code	an..3	**R**	BT:Invoice line charge reason code(BT-145) DESC:The reason for the Invoice line charge, expressed as a code.	ABL

Segment Notes:

Segment number: 103

SG26	- R	9999999	-	LIN-PIA-IMD-QTY-ALI-DTM-FTX-SG27-SG29-SG30-SG34-SG39
SG39	- C	30	-	ALC-SG41-SG42
SG41	- C	1	-	PCD
PCD	- M	1	-	Percentage details

Function:

To specify percentage information.

EDIFACT			EAN		
Tag	Name	Format	St	Usage	Example
C501	PERCENTAGE DETAILS		**M**		
5245	Percentage type code qualifier	an..3	**M**	2 = Charge	2
5482	Percentage	n..10	**R**	BT:Invoice line charge percentage(BT-143) DESC:The percentage that may be used, in conjunction with the Invoice line charge base amount, to calculate the Invoice line charge amount.	10

Segment Notes:

Segment number: 104

SG26	- R	9999999	-	LIN-PIA-IMD-QTY-ALI-DTM-FTX-SG27-SG29-SG30-SG34-SG39
SG39	- C	30	-	ALC-SG41-SG42
SG42	- R	2	-	MOA
MOA	- M	1	-	Monetary amount

Function:

To specify a monetary amount.

EDIFACT			EAN		
Tag	Name	Format	St	Usage	Example
C516	MONETARY AMOUNT		**M**		
5025	Monetary amount type code qualifier	an..3	**M**	23 = Charge amount	23
5004	Monetary amount	n..35	**R**	BT:Invoice line charge amount(BT-141) DESC:The amount of a charge, without VAT.	100.00

Segment Notes:

Segment number: 105

SG26	- R	9999999	-	LIN-PIA-IMD-QTY-ALI-DTM-FTX-SG27-SG29-SG30-SG34-SG39
SG39	- C	30	-	ALC-SG41-SG42
SG42	- C	2	-	MOA
MOA	- M	1	-	Monetary amount

Function:

To specify a monetary amount.

EDIFACT			EAN		
Tag	Name	Format	St	Usage	Example
C516	MONETARY AMOUNT		**M**		
5025	Monetary amount type code qualifier	an..3	**M**	25 = Charge/allowance basis	25
5004	Monetary amount	n..35	**R**	BT:Invoice line charge base amount(BT-142) DESC:The base amount that may be used, in conjunction with the Invoice line charge percentage, to calculate the Invoice line charge amount.	1000.00

Segment Notes:

Segment number: 106

SG26	- C	9999999	-	LIN-PIA-IMD-QTY-ALI-DTM-FTX-SG27-SG29-SG30-SG34
LIN	- M	1	-	Line item

Function:

To identify a line item and configuration.

EDIFACT			EAN		
Tag	Name	Format	St	Usage	Example
1082	Line item identifier	an..6	**R**	BT:Invoice line identifier(BT-126) DESC:A unique identifier for the individual line within the Invoice.	2

Segment Notes:

Segment number: 107

SG26	- C	9999999	-	LIN-PIA-IMD-QTY-ALI-DTM-FTX-SG27-SG29-SG30-SG34
PIA	- C	1	-	Additional product id

Function:

To specify additional or substitutional item identification codes.

EDIFACT			EAN		
Tag	Name	Format	St	Usage	Example
4347	Product identifier code qualifier	an..3	**M**	5 = Product identification	5
C212	ITEM NUMBER IDENTIFICATION		**M**		
7140	Item identifier	an..35	**R**	BT:Item Seller's identifier(BT-155) DESC:An identifier, assigned by the Seller, for the item.	JB008
7143	Item type identification code	an..3	**R**	SA = Supplier's article number	SA

Segment Notes:

Segment number: 108

SG26	- C	9999999	-	LIN-PIA-IMD-QTY-ALI-DTM-FTX-SG27-SG29-SG30-SG34
IMD	- R	1	-	Item description

Function:

To describe an item in either an industry or free format.

EDIFACT			EAN		
Tag	Name	Format	St	Usage	Example
7077	Description format code	an..3	**R**	F = Free-form	F
C272	ITEM CHARACTERISTIC		**N**		
7081	Item characteristic code	an..3	**N**	Not used	
C273	ITEM DESCRIPTION		**R**		
7009	Item description code	an..17	**C**		
1131	Code list identification code	an..17	**C**		
3055	Code list responsible agency code	an..3	**C**		
7008	Item description	an..256	**R**	BT:Item name(BT-153) DESC:A name for an item.	Parker Pen

Segment Notes:

Segment number: 109

SG26	- C	9999999	- LIN-PIA-IMD-QTY-ALI-DTM-FTX-SG27-SG29-SG30-SG34
IMD	- C	1	- Item description

Function:

To describe an item in either an industry or free format.

EDIFACT			EAN		
Tag	Name	Format	St	Usage	Example
7077	Description format code	an..3	**R**	A = Free-form long description	A
C272	ITEM CHARACTERISTIC		**N**		
7081	Item characteristic code	an..3	**N**	Not used	
C273	ITEM DESCRIPTION		**R**		
7009	Item description code	an..17	**N**	Not used	
1131	Code list identification code	an..17	**N**	Not used	
3055	Code list responsible agency code	an..3	**N**	Not used	
7008	Item description	an..256	**R**	BT:Item description(BT-154) DESC:A description for an item.	Perker Pen, Black, model Sansa

Segment Notes:

Segment number: 110

SG26	- C	9999999	-	LIN-PIA-IMD-QTY-ALI-DTM-FTX-SG27-SG29-SG30-SG34
QTY	- R	1	-	Quantity

Function:

To specify a pertinent quantity.

EDIFACT			EAN		
Tag	Name	Format	St	Usage	Example
C186	QUANTITY DETAILS		**M**		
6063	Quantity type code qualifier	an..3	**M**	47 = Invoiced quantity	47
6060	Quantity	an..35	**R**	BT:Invoiced quantity(BT-129) DESC:The quantity of items (goods or services) that is charged in the Invoice line.	100
6411	Measurement unit code	an..8	**R**	BT:Invoiced quantity unit of measure(BT-130) DESC:The unit of measure that applies to the invoiced quantity. Usage of Rec 20 with Rec 21 extensions is allowed as defined in usage note 2.a) of Rec 20	C62

Segment Notes:

Segment number: 111

SG26	- C	9999999	- LIN-PIA-IMD-QTY-ALI-DTM-FTX-SG27-SG29-SG30-SG34
ALI	- C	1	- Additional information

Function:

To indicate that special conditions due to the origin, customs preference, fiscal or commercial factors are applicable.

EDIFACT			EAN		
Tag	Name	Format	St	Usage	Example
3239	Country of origin name code	an..3	**R**	BT:Item country of origin(BT-159) DESC:The code identifying the country from which the item originates.	NL

Segment Notes:

Segment number: 112

SG26	- C	9999999	- LIN-PIA-IMD-QTY-ALI-DTM-FTX-SG27-SG29-SG30-SG34
DTM	- C	1	- Date/time/period

Function:

To specify date, and/or time, or period.

EDIFACT			EAN		
Tag	Name	Format	St	Usage	Example
C507	DATE/TIME/PERIOD		**M**		
2005	Date or time or period function code qualifier	an..3	**M**	167 = Charge period start date BT:INVOICE LINE PERIOD(BG-26) DESC:A group of business terms providing information about the period relevant for the Invoice line.	167
2380	Date or time or period value	an..35	**R**	BT:Invoice line period start date(BT-134) DESC:The date when the Invoice period for this Invoice line starts.	2013-03-10

Segment Notes:

Segment number: 113

SG26	- C	9999999	- LIN-PIA-IMD-QTY-ALI-DTM-FTX-SG27-SG29-SG30-SG34
DTM	- C	1	- Date/time/period

Function:

To specify date, and/or time, or period.

EDIFACT			EAN		
Tag	Name	Format	St	Usage	Example
C507	DATE/TIME/PERIOD		**M**		
2005	Date or time or period function code qualifier	an..3	**M**	168 = Charge period end date BT:INVOICE LINE PERIOD(BG-26) DESC:A group of business terms providing information about the period relevant for the Invoice line.	168
2380	Date or time or period value	an..35	**R**	BT:Invoice line period end date(BT-135) DESC:The date when the Invoice period for this Invoice line ends.	2013-04-10

Segment Notes:

Segment number: 114

SG26	- C	9999999	- LIN-PIA-IMD-QTY-ALI-DTM-FTX-SG27-SG29-SG30-SG34
FTX	- C	1	- Free text

Function:

To provide free form or coded text information.

EDIFACT			EAN		
Tag	Name	Format	St	Usage	Example
4451	Text subject code qualifier	an..3	**M**	ACB = Additional information	ACB
4453	Free text function code	an..3	**N**	Not used	
C107	TEXT REFERENCE		**N**		
4441	Free text value code	an..17	**N**	Not used	
C108	TEXT LITERAL		**R**		
4440	Free text value	an..512	**M**	BT:Invoice line noter(BT-127) DESC:A textual note that gives unstructured information that is relevant to the Invoice line.	Second line

Segment Notes:

Segment number: 115

SG26	- C	9999999	-	LIN-PIA-IMD-QTY-ALI-DTM-FTX-SG27-SG29-SG30-SG34
SG27	- R	1	-	MOA
MOA	- M	1	-	Monetary amount

Function:

To specify a monetary amount.

EDIFACT			EAN		
Tag	Name	Format	St	Usage	Example
C516	MONETARY AMOUNT		**M**		
5025	Monetary amount type code qualifier	an..3	**M**	203 = Line item amount	203
5004	Monetary amount	n..35	**R**	BT:Invoice line net amount(BT-131) DESC:The total amount of the Invoice line.	500.00

Segment Notes:

Segment number: 116

SG26	- C	9999999	-	LIN-PIA-IMD-QTY-ALI-DTM-FTX-SG27-SG29-SG30-SG34
SG27	- R	1	-	MOA
MOA	- M	1	-	Monetary amount

Function:

To specify a monetary amount.

EDIFACT			EAN		
Tag	Name	Format	St	Usage	Example
C516	MONETARY AMOUNT		**M**		
5025	Monetary amount type code qualifier	an..3	**M**	38 = Invoice item amount	38
5004	Monetary amount	n..35	**R**	BT:Invoice line net amount including VAT (NBT-100) DESC:The total amount of the Invoice line including VAT.	625.00

Segment Notes:

Segment number: 117

SG26	- C	9999999	-	LIN-PIA-IMD-QTY-ALI-DTM-FTX-SG27-SG29-SG30-SG34
SG29	- R	1	-	PRI
PRI	- M	1	-	Price details

Function:

To specify price information.

EDIFACT			EAN		
Tag	Name	Format	St	Usage	Example
C509	PRICE INFORMATION		**R**		
5125	Price code qualifier	an..3	**M**	AAA = Calculation net BT:PRICE DETAILS(BG-29) DESC:A group of business terms providing information about the price applied for the goods and services invoiced on the Invoice line.	AAA
5118	Price amount	n..15	**R**	BT:Item net price(BT-146) DESC:The price of an item, exclusive of VAT, after subtracting item price discount.	5.0000

Segment Notes:

Segment number: 118

SG26	- C	9999999	-	LIN-PIA-IMD-QTY-ALI-DTM-FTX-SG27-SG29-SG30-SG34
SG30	- C	1	-	RFF
RFF	- M	1	-	Reference

Function:

To specify a reference.

EDIFACT			EAN		
Tag	Name	Format	St	Usage	Example
C506	REFERENCE		**M**		
1153	Reference code qualifier	an..3	**M**	AVE = Metering point DESC:An identifier for an object on which the invoice line is based, given by the Seller. BT:Invoice line object identifier identification scheme identifier (BT-128-1)	AVE
1154	Reference identifier	an..70	**R**	BT:Invoice line object identifier(BT-128) DESC:An identifier for an object on which the invoice line is based, given by the Seller.	Object 2

Segment Notes:

Segment number: 119

SG26	- C	9999999	-	LIN-PIA-IMD-QTY-ALI-DTM-FTX-SG27-SG29-SG30-SG34
SG30	- C	1	-	RFF
RFF	- M	1	-	Reference

Function:

To specify a reference.

EDIFACT			EAN		
Tag	Name	Format	St	Usage	Example
C506	REFERENCE		**M**		
1153	Reference code qualifier	an..3	**M**	ON = Order number (buyer) DESC:An identifier for an object on which the invoice line is based, given by the Seller. BT:Invoice line object identifier identification scheme identifier (BT-128-1)	ON
1154	Reference identifier	an..70	**C**		
1156	Document line identifier	an..6	**R**	BT:Referenced purchase order line reference(BT-132) DESC:An identifier for a referenced line within a purchase order, issued by the Buyer.	2

Segment Notes:

Segment number: 120

SG26	- C	9999999	-	LIN-PIA-IMD-QTY-ALI-DTM-FTX-SG27-SG29-SG30-SG34
SG30	- C	1	-	RFF
RFF	- M	1	-	Reference

Function:

To specify a reference.

EDIFACT			EAN		
Tag	Name	Format	St	Usage	Example
C506	REFERENCE		**M**		
1153	Reference code qualifier	an..3	**M**	AWQ = Accounting entry	AWQ
1154	Reference identifier	an..70	**R**	BT:Invoice line Buyer accounting reference (BT-133) DESC:A textual value that specifies where to book the relevant data into the Buyer's financial accounts.	ACC7654

Segment Notes:

Segment number: 121

SG26	- C	9999999	-	LIN-PIA-IMD-QTY-ALI-DTM-FTX-SG27-SG29-SG30-SG34
SG34	- R	1	-	TAX-MOA
TAX	- M	1	-	Duty/tax/fee details

Function:

To specify relevant duty/tax/fee information.

EDIFACT			EAN		
Tag	Name	Format	St	Usage	Example
5283	Duty or tax or fee function code qualifier	an..3	**M**	7 = Tax	7
C241	DUTY/TAX/FEE TYPE		**R**		
5153	Duty or tax or fee type name code	an..3	**R**	VAT = Value added tax	VAT
C533	DUTY/TAX/FEE ACCOUNT DETAIL		**N**		
5289	Duty or tax or fee account code	an..6	**N**	Not used	
5286	Duty or tax or fee assessment basis value	an..15	**C**		
C243	DUTY/TAX/FEE DETAIL		**C**		
5279	Duty or tax or fee rate code	an..7	**C**		
1131	Code list identification code	an..17	**C**		
3055	Code list responsible agency code	an..3	**C**		
5278	Duty or tax or fee rate	an..17	**R**	BT:Invoiced item VAT rate (BT-152) DESC:The VAT rate, represented as percentage that applies to the invoiced item.	25
5305	Duty or tax or fee category code	an..3	**R**	BT:Invoiced item VAT category code (BT-151) DESC:The VAT category code for the invoiced item. S = Standard rate Z = Zero rated goods E = Exempt from tax AE = VAT Reverse Charge K = VAT exempt for EEA intra-community supply of goods and services G = Free export item, tax not charged O = Services outside scope of tax L = Canary Islands general indirect tax M = Tax for production, services and importation in Ceuta and Melilla	S

Segment Notes:

Segment number: 122

SG26	- C	9999999	-	LIN-PIA-IMD-QTY-ALI-DTM-FTX-SG27-SG29-SG30-SG34
SG34	- R	1	-	TAX-MOA
MOA	- C	2	-	Monetary amount

Function:

To specify a monetary amount.

EDIFACT			EAN		
Tag	Name	Format	St	Usage	Example
C516	MONETARY AMOUNT		**M**		
5025	Monetary amount type code qualifier	an..3	**M**	125 = Taxable amount	125
5004	Monetary amount	n..35	**R**	BT:Invoice line VAT base amount(NBT-032) DESC:Invoice line VAT base amount.	500.00

Segment Notes:

Segment number: 123

SG26	- C	9999999	-	LIN-PIA-IMD-QTY-ALI-DTM-FTX-SG27-SG29-SG30-SG34
SG34	- R	1	-	TAX-MOA
MOA	- C	2	-	Monetary amount

Function:

To specify a monetary amount.

EDIFACT			EAN		
Tag	Name	Format	St	Usage	Example
C516	MONETARY AMOUNT		**M**		
5025	Monetary amount type code qualifier	an..3	**M**	124 = Tax amount	124
5004	Monetary amount	n..35	**R**	BT:Invoice line VAT amount (NBT-033) DESC:Invoice line VAT amount.	125.00

Segment Notes:

Segment number: 124

SG26	- C	9999999	-	LIN-PIA-IMD-QTY-SG27-SG29-SG34
LIN	- M	1	-	Line item

Function:

To identify a line item and configuration.

EDIFACT			EAN		
Tag	Name	Format	St	Usage	Example
1082	Line item identifier	an..6	**R**	BT:Invoice line identifier(BT-126) DESC:A unique identifier for the individual line within the Invoice.	3

Segment Notes:

Segment number: 125

SG26	- C	9999999	-	LIN-PIA-IMD-QTY-SG27-SG29-SG34
PIA	- C	1	-	Additional product id

Function:

To specify additional or substitutional item identification codes.

EDIFACT			EAN		
Tag	Name	Format	St	Usage	Example
4347	Product identifier code qualifier	an..3	**M**	5 = Product identification	5
C212	ITEM NUMBER IDENTIFICATION		**M**		
7140	Item identifier	an..35	**R**	BT:Item Seller's identifier(BT-155) DESC:An identifier, assigned by the Seller, for the item.	JB009
7143	Item type identification code	an..3	**R**	SA = Supplier's article number	SA

Segment Notes:

Segment number: 126

SG26	- C	9999999	-	LIN-PIA-IMD-QTY-SG27-SG29-SG34
IMD	- R	1	-	Item description

Function:

To describe an item in either an industry or free format.

EDIFACT			EAN		
Tag	Name	Format	St	Usage	Example
7077	Description format code	an..3	**R**	F = Free-form	F
C272	ITEM CHARACTERISTIC		**N**		
7081	Item characteristic code	an..3	**N**	Not used	
C273	ITEM DESCRIPTION		**R**		
7009	Item description code	an..17	**C**		
1131	Code list identification code	an..17	**C**		
3055	Code list responsible agency code	an..3	**C**		
7008	Item description	an..256	**R**	BT:Item name(BT-153) DESC:A name for an item.	American Cookies

Segment Notes:

Segment number: 127

SG26	- C	9999999	- LIN-PIA-IMD-QTY-SG27-SG29-SG34
QTY	- R	1	- Quantity

Function:

To specify a pertinent quantity.

EDIFACT			EAN		
Tag	Name	Format	St	Usage	Example
C186	QUANTITY DETAILS		**M**		
6063	Quantity type code qualifier	an..3	**M**	47 = Invoiced quantity	47
6060	Quantity	an..35	**R**	BT:Invoiced quantity(BT-129) DESC:The quantity of items (goods or services) that is charged in the Invoice line.	500
6411	Measurement unit code	an..8	**R**	BT:Invoiced quantity unit of measure(BT-130) DESC:The unit of measure that applies to the invoiced quantity. Usage of Rec 20 with Rec 21 extensions is allowed as defined in usage note 2.a) of Rec 20	C62

Segment Notes:

Segment number: 128

SG26	- C	9999999	-	LIN-PIA-IMD-QTY-SG27-SG29-SG34
SG27	- R	99	-	MOA
MOA	- M	1	-	Monetary amount

Function:

To specify a monetary amount.

EDIFACT			EAN		
Tag	Name	Format	St	Usage	Example
C516	MONETARY AMOUNT		**M**		
5025	Monetary amount type code qualifier	an..3	**M**	203 = Line item amount	203
5004	Monetary amount	n..35	**M**	BT:Invoice line net amount(BT-131) DESC:The total amount of the Invoice line.	2500.00

Segment Notes:

Segment number: 129

SG26	- C	9999999	-	LIN-PIA-IMD-QTY-SG27-SG29-SG34
SG27	- R	1	-	MOA
MOA	- M	1	-	Monetary amount

Function:

To specify a monetary amount.

EDIFACT			EAN		
Tag	Name	Format	St	Usage	Example
C516	MONETARY AMOUNT		**M**		
5025	Monetary amount type code qualifier	an..3	**M**	38 = Invoice item amount	38
5004	Monetary amount	n..35	**R**	BT:Invoice line net amount including VAT (NBT-100) DESC:The total amount of the Invoice line including VAT.	2800.00

Segment Notes:

Segment number: 130

SG26	- C	9999999	-	LIN-PIA-IMD-QTY-SG27-SG29-SG34
SG29	- R	1	-	PRI
PRI	- M	1	-	Price details

Function:

To specify price information.

EDIFACT			EAN		
Tag	Name	Format	St	Usage	Example
C509	PRICE INFORMATION		**R**		
5125	Price code qualifier	an..3	**M**	AAA = Calculation net BT:PRICE DETAILS(BG-29) DESC:A group of business terms providing information about the price applied for the goods and services invoiced on the Invoice line.	AAA
5118	Price amount	n..15	**R**	BT:Item net price(BT-146) DESC:The price of an item, exclusive of VAT, after subtracting item price discount.	5.0000

Segment Notes:

Segment number: 131

SG26	- C	9999999	-	LIN-PIA-IMD-QTY-SG27-SG29-SG34
SG34	- R	1	-	TAX-MOA
TAX	- M	1	-	Duty/tax/fee details

Function:

To specify relevant duty/tax/fee information.

EDIFACT			EAN		
Tag	Name	Format	St	Usage	Example
5283	Duty or tax or fee function code qualifier	an..3	**M**	7 = Tax	7
C241	DUTY/TAX/FEE TYPE		**R**		
5153	Duty or tax or fee type name code	an..3	**R**	VAT = Value added tax	VAT
C533	DUTY/TAX/FEE ACCOUNT DETAIL		**N**		
5289	Duty or tax or fee account code	an..6	**N**	Not used	
5286	Duty or tax or fee assessment basis value	an..15	**C**		
C243	DUTY/TAX/FEE DETAIL		**C**		
5279	Duty or tax or fee rate code	an..7	**C**		
1131	Code list identification code	an..17	**C**		
3055	Code list responsible agency code	an..3	**C**		
5278	Duty or tax or fee rate	an..17	**R**	BT:Invoiced item VAT rate (BT-152) DESC:The VAT rate, represented as percentage that applies to the invoiced item.	12
5305	Duty or tax or fee category code	an..3	**R**	BT:Invoiced item VAT category code (BT-151) DESC:The VAT category code for the invoiced item. S = Standard rate Z = Zero rated goods E = Exempt from tax AE = VAT Reverse Charge K = VAT exempt for EEA intra-community supply of goods and services G = Free export item, tax not charged O = Services outside scope of tax L = Canary Islands general indirect tax M = Tax for production, services and importation in Ceuta and Melilla	S

Segment Notes:

Segment number: 132

SG26	- C	9999999	-	LIN-PIA-IMD-QTY-SG27-SG29-SG34
SG34	- R	1	-	TAX-MOA
MOA	- C	2	-	Monetary amount

Function:

To specify a monetary amount.

EDIFACT			EAN		
Tag	Name	Format	St	Usage	Example
C516	MONETARY AMOUNT		**M**		
5025	Monetary amount type code qualifier	an..3	**M**	125 = Taxable amount	125
5004	Monetary amount	n..35	**R**	BT:Invoice line VAT base amount(NBT-032) DESC:Invoice line VAT base amount.	2500.00

Segment Notes:

Segment number: 133

SG26	- C	9999999	-	LIN-PIA-IMD-QTY-SG27-SG29-SG34
SG34	- R	1	-	TAX-MOA
MOA	- C	2	-	Monetary amount

Function:

To specify a monetary amount.

EDIFACT			EAN		
Tag	Name	Format	St	Usage	Example
C516	MONETARY AMOUNT		**M**		
5025	Monetary amount type code qualifier	an..3	**M**	124 = Tax amount	124
5004	Monetary amount	n..35	**R**	BT:Invoice line VAT amount (NBT-033) DESC:Invoice line VAT amount.	300.00

Segment Notes:

Segment number: 134

UNS	- C	1 - Section control			
Function: To separate header, detail and summary sections of a message. Notes: To be used by message designers only when required to avoid ambiguities.					
EDIFACT			EAN		
Tag	Name	Format	St	Usage	Example
0081	Section identification	a1	**M**		D
Segment Notes: BT:DOCUMENT TOTALS(BG-22) DESC:A group of business terms providing the monetary totals for the Invoice.					

Segment number: 135

SG50	- M	1	- MOA
MOA	- M	1	- Monetary amount

Function:

To specify a monetary amount.

EDIFACT			EAN		
Tag	Name	Format	St	Usage	Example
C516	MONETARY AMOUNT		**M**		
5025	Monetary amount type code qualifier	an..3	**M**	79 = Total line items amount	79
5004	Monetary amount	n..35	**R**	BT:Sum of Invoice line net amount(BT-106) DESC:Sum of all Invoice line net amounts in the Invoice.	4000.00

Segment Notes:

Segment number: 136

SG50	- M	1	- MOA
MOA	- M	1	- Monetary amount

Function:

To specify a monetary amount.

EDIFACT			EAN		
Tag	Name	Format	St	Usage	Example
C516	MONETARY AMOUNT		**M**		
5025	Monetary amount type code qualifier	an..3	**M**	389 = Amount excluding Value Added Tax (VAT)	389
5004	Monetary amount	n..35	**R**	BT:Invoice total amount without VAT(BT-109) DESC:The total amount of the Invoice without VAT.	4000.00

Segment Notes:

Segment number: 137

SG50	- M	1	- MOA
MOA	- M	1	- Monetary amount

Function:

To specify a monetary amount.

EDIFACT			EAN		
Tag	Name	Format	St	Usage	Example
C516	MONETARY AMOUNT		**M**		
5025	Monetary amount type code qualifier	an..3	**M**	388 = Total amount including Value Added Tax (VAT)	388
5004	Monetary amount	n..35	**R**	BT:Invoice total amount with VAT(BT-112) DESC:The total amount of the Invoice with VAT.	4675.00

Segment Notes:

Segment number: 138

SG50	- M	1	- MOA
MOA	- M	1	- Monetary amount

Function:

To specify a monetary amount.

EDIFACT			EAN		
Tag	Name	Format	St	Usage	Example
C516	MONETARY AMOUNT		**M**		
5025	Monetary amount type code qualifier	an..3	**M**	9 = Amount due/amount payable	9
5004	Monetary amount	n..35	**R**	BT:Amount due for payment(BT-115) DESC:The outstanding amount that is requested to be paid.	2337.50

Segment Notes:

Segment number: 139

SG50	- C	1	- MOA
MOA	- M	1	- Monetary amount

Function:

To specify a monetary amount.

EDIFACT			EAN		
Tag	Name	Format	St	Usage	Example
C516	MONETARY AMOUNT		**M**		
5025	Monetary amount type code qualifier	an..3	**M**	260 = Total allowances	260
5004	Monetary amount	n..35	**R**	BT:Sum of allowances on document level(BT-107) DESC:Sum of all allowances on document level in the Invoice.	150.00

Segment Notes:

Segment number: 140

SG50	- C	1	- MOA
MOA	- M	1	- Monetary amount

Function:

To specify a monetary amount.

EDIFACT			EAN		
Tag	Name	Format	St	Usage	Example
C516	MONETARY AMOUNT		**M**		
5025	Monetary amount type code qualifier	an..3	**M**	259 = Total charges	259
5004	Monetary amount	n..35	**R**	BT:Sum of charges on document level(BT-108) DESC:Sum of all charges on document level in the Invoice.	150.00

Segment Notes:

Segment number: 141

SG50	- C	1	- MOA
MOA	- M	1	- Monetary amount

Function:

To specify a monetary amount.

EDIFACT			EAN		
Tag	Name	Format	St	Usage	Example
C516	MONETARY AMOUNT		**M**		
5025	Monetary amount type code qualifier	an..3	**M**	2 = VAT, 2nd value	2
5004	Monetary amount	n..35	**R**	BT:Invoice total VAT amount in accounting currency (BT-111) DESC:The VAT total amount expressed in the accounting currency accepted or required in the country of the Seller.	628.62

Segment Notes:

Segment number: 142

SG50	- C	1	- MOA
MOA	- M	1	- Monetary amount

Function:

To specify a monetary amount.

EDIFACT			EAN		
Tag	Name	Format	St	Usage	Example
C516	MONETARY AMOUNT		**M**		
5025	Monetary amount type code qualifier	an..3	**M**	113 = Prepaid amount	113
5004	Monetary amount	n..35	**R**	BT:Paid amount (BT-113) DESC:The sum of amounts which have been paid in advance.	2337.50

Segment Notes:

Segment number: 143

SG50	- C	1	- MOA
MOA	- M	1	- Monetary amount

Function:

To specify a monetary amount.

EDIFACT			EAN		
Tag	Name	Format	St	Usage	Example
C516	MONETARY AMOUNT		**M**		
5025	Monetary amount type code qualifier	an..3	**M**	366 = Rounding amount	366
5004	Monetary amount	n..35	**R**	BT:Rounding amount (BT-114) DESC:The amount to be added to the invoice total to round the amount to be paid.	0

Segment Notes:

Segment number: 144

SG50	- C	1	- MOA
MOA	- M	1	- Monetary amount

Function:

To specify a monetary amount.

EDIFACT			EAN		
Tag	Name	Format	St	Usage	Example
C516	MONETARY AMOUNT		**M**		
5025	Monetary amount type code qualifier	an..3	**M**	176 = Message total duty/tax/fee amount	176
5004	Monetary amount	n..35	**R**	BT:Invoice total VAT amount (BT-110) DESC:The total VAT amount for the Invoice.	675.00

Segment Notes:

Segment number: 145

SG52	- R	10	- TAX-MOA
TAX	- M	1	- Duty/tax/fee details

Function:

To specify relevant duty/tax/fee information.

EDIFACT			EAN		
Tag	Name	Format	St	Usage	Example
5283	Duty or tax or fee function code qualifier	an..3	**M**	7 = Tax	7
C241	DUTY/TAX/FEE TYPE		**C**		
5153	Duty or tax or fee type name code	an..3	**C**	VAT = Value added tax	VAT
C533	DUTY/TAX/FEE ACCOUNT DETAIL		**N**		
5289	Duty or tax or fee account code	an..6	**N**	Not used	
5286	Duty or tax or fee assessment basis value	an..15	**N**	Not used	
C243	DUTY/TAX/FEE DETAIL		**C**		
5279	Duty or tax or fee rate code	an..7	**N**	Not used	
1131	Code list identification code	an..17	**N**	Not used	
3055	Code list responsible agency code	an..3	**N**	Not used	
5278	Duty or tax or fee rate	an..17	**R**	BT:VAT category rate(BT-119) DESC:The VAT rate, represented as percentage that applies for the relevant VAT category.	25
5305	Duty or tax or fee category code	an..3	**R**	BT:VAT category code(BT-118) DESC:Coded identification of a VAT category. S = Standard rate Z = Zero rated goods E = Exempt from tax AE = VAT Reverse Charge K = VAT exempt for EEA intra-community supply of goods and services G = Free export item, tax not charged O = Services outside scope of tax L = Canary Islands general indirect tax M = Tax for production, services and importation in Ceuta and Melilla	S

Segment Notes:

Segment number: 146

SG52	- R	10	- TAX-MOA
MOA	- R	1	- Monetary amount

Function:

To specify a monetary amount.

EDIFACT			EAN		
Tag	Name	Format	St	Usage	Example
C516	MONETARY AMOUNT		**M**		
5025	Monetary amount type code qualifier	an..3	**M**	125 = Taxable amount	125
5004	Monetary amount	n..35	**M**	BT:VAT category taxable amount(BT-116) DESC:Sum of all taxable amounts subject to a specific VAT category code and VAT category rate (if the VAT category rate is applicable).	1500.00

Segment Notes:

Segment number: 147

SG52	- R	10	- TAX-MOA
MOA	- R	1	- Monetary amount

Function:

To specify a monetary amount.

EDIFACT			EAN		
Tag	Name	Format	St	Usage	Example
C516	MONETARY AMOUNT		**M**		
5025	Monetary amount type code qualifier	an..3	**M**	124 = Tax amount	124
5004	Monetary amount	n..35	**M**	BT:VAT category tax amount(BT-117) DESC:The total VAT amount for a given VAT category.	375.00

Segment Notes:

Segment number: 148

SG52	- R	10	- TAX-MOA
TAX	- M	1	- Duty/tax/fee details

Function:

To specify relevant duty/tax/fee information.

EDIFACT			EAN		
Tag	Name	Format	St	Usage	Example
5283	Duty or tax or fee function code qualifier	an..3	**M**	7 = Tax	7
C241	DUTY/TAX/FEE TYPE		**C**		
5153	Duty or tax or fee type name code	an..3	**C**	VAT = Value added tax	VAT
C533	DUTY/TAX/FEE ACCOUNT DETAIL		**N**		
5289	Duty or tax or fee account code	an..6	**N**	Not used	
5286	Duty or tax or fee assessment basis value	an..15	**N**	Not used	
C243	DUTY/TAX/FEE DETAIL		**C**		
5279	Duty or tax or fee rate code	an..7	**N**	Not used	
1131	Code list identification code	an..17	**N**	Not used	
3055	Code list responsible agency code	an..3	**N**	Not used	
5278	Duty or tax or fee rate	an..17	**R**	BT:VAT category rate(BT-119) DESC:The VAT rate, represented as percentage that applies for the relevant VAT category.	12
5305	Duty or tax or fee category code	an..3	**R**	BT:VAT category code(BT-118) DESC:Coded identification of a VAT category. S = Standard rate Z = Zero rated goods E = Exempt from tax AE = VAT Reverse Charge K = VAT exempt for EEA intra-community supply of goods and services G = Free export item, tax not charged O = Services outside scope of tax L = Canary Islands general indirect tax M = Tax for production, services and importation in Ceuta and Melilla	S

Segment Notes:

Segment number: 149

SG52	- R	10	- TAX-MOA
MOA	- R	1	- Monetary amount

Function:

To specify a monetary amount.

EDIFACT			EAN		
Tag	Name	Format	St	Usage	Example
C516	MONETARY AMOUNT		**M**		
5025	Monetary amount type code qualifier	an..3	**M**	125 = Taxable amount	125
5004	Monetary amount	n..35	**R**	BT:VAT category taxable amount(BT-116) DESC:Sum of all taxable amounts subject to a specific VAT category code and VAT category rate (if the VAT category rate is applicable).	2500.00

Segment Notes:

Segment number: 150

SG52	- R	10	- TAX-MOA
MOA	- R	1	- Monetary amount

Function:

To specify a monetary amount.

EDIFACT			EAN		
Tag	Name	Format	St	Usage	Example
C516	MONETARY AMOUNT		**M**		
5025	Monetary amount type code qualifier	an..3	**M**	124 = Tax amount	124
5004	Monetary amount	n..35	**R**	BT:VAT category tax amount(BT-117) DESC:The total VAT amount for a given VAT category.	300.00

Segment Notes:

Segment number: 151

UNT - C 1 - Message trailer					
Function: To end and check the completeness of a message. Notes: 1. 0062, the value shall be identical to the value in 0062 in the corresponding UNH segment.					
EDIFACT			EAN		
Tag	Name	Format	St	Usage	Example
0074	Number of segments in a message	n..10	**M**		151
0062	Message reference number	an..14	**M**		TOSL110
Segment Notes:					

7 Zbirni račun

Zbirni račun pomeni, da je račun vezan na več dostavnih mest in/ali več naročil in/ali več dobav. Standard EN 16931-1 določa, da se račun lahko nanaša zgolj na eno dostavo in eno naročilo. V Sloveniji je uveljavljen t.i. zbirni račun, ki upošteva drugačna razmerja. Pravila in omejitve pri podpori zbirnih računov so opisana v *e-SLOG 2.0 Elektronski račun – 1. del: Splošna navodila*, poglavje 7.2.4.

Splošne zahteve za pripravo zbirnih računov:

- V tip računa (BT-3) se za zbirni račun zapiše šifro 385 (EDIFACT standard, Consolidated invoice),
- V kolikor se dobave nanašajo na obdobje več dni se BT-72 (Actual delivery date) zapiše skupaj s podatki dobavnice (Številka dobavnice + datum dobavnice + datum dostave),
- Možen je vnos datuma naročila.

Podprta sta dva načina zapisa zbirnega računa:

- podatki dobav in naročil na nivoju glave računa,
- podatki dobav in naročil na nivoju postavke računa.

Izdajatelj lahko izbere enega izmed podprtih načinov ali kombinacijo obeh (npr. v primeru enega naročila in več dobav, se podatki o naročilu lahko zapišejo v glavi, podatki o dobavah pa na postavkah)

7.1 Podatki dobav in naročil na nivoju glave računa

Ta način je primeren v primeru, ko se dobave na računu nanašajo na isto(eno) lokacijo, poleg tega je omejitev, da se postavke težko poveže z posameznimi naročili (v kolikor je več naročil).

- V primeru, da se na glavi računa navede zgolj številke dobavnic se večkrat zapiše BT:Despatch advice reference (BT-16)
- V primeru, da se na glavi računa navede zgolj številke naročil se večkrat zapiše BT: Purchase order reference (BT-13).

Primer zapisa za večje število dobav:

```
<G_SG1>
     <S_RFF>
         <C_C506>
             <D_1153>AAK</D_1153>
             <D_1154>5433</D_1154>
         </C_C506>
     </S_RFF>
     <!--datum dobavnice-->
     <S_DTM>
         <C_C507>
             <D_2005>171</D_2005>
             <D_2380>2018-03-10</D_2380>
         </C_C507>
     </S_DTM>
     <!--datum dostave-->
     <S_DTM>
         <C_C507>
             <D_2005>35</D_2005>
             <D_2380>2018-03-10</D_2380>
         </C_C507>
     </S_DTM>
 </G_SG1>
```

```
<G_SG1>
    <S_RFF>
        <C_C506>
            <D_1153>AAK</D_1153>
            <D_1154>3345</D_1154>
        </C_C506>
    </S_RFF>
    <!--datum dobavnice-->
    <S_DTM>
        <C_C507>
            <D_2005>171</D_2005>
            <D_2380>2018-03-11</D_2380>
        </C_C507>
    </S_DTM>
    <!--datum dostave-->
    <S_DTM>
        <C_C507>
            <D_2005>35</D_2005>
            <D_2380>2018-03-11</D_2380>
        </C_C507>
    </S_DTM>

</G_SG1>
<G_SG1>
    <S_RFF>
        <C_C506>
            <D_1153>AAK</D_1153>
            <D_1154>4522</D_1154>
        </C_C506>
    </S_RFF>
    <!--datum dobavnice-->
    <S_DTM>
        <C_C507>
            <D_2005>171</D_2005>
            <D_2380>2018-03-12</D_2380>
        </C_C507>
    </S_DTM>
    <!--datum dostave-->
    <S_DTM>
        <C_C507>
            <D_2005>35</D_2005>
            <D_2380>2018-03-12</D_2380>
        </C_C507>
    </S_DTM>
</G_SG1>
```

Primer zapisa za večje število naročil:

```
<G_SG1>
        <S_RFF>
            <C_C506>
                <D_1153>ON</D_1153>
                <D_1154>511433</D_1154>
            </C_C506>
        </S_RFF>
    <!--datum naročila-->
          <S_DTM>
       <C_C507>
                <D_2005>171</D_2005>
                <D_2380>2018-03-10</D_2380>
       </C_C507>
          </S_DTM>

</G_SG1>
<G_SG1>
    <S_RFF>
        <C_C506>
            <D_1153>ON</D_1153>
            <D_1154>332345</D_1154>
```

```
            </C_C506>
        </S_RFF>
         <!--datum naročila-->

         <S_DTM>
       <C_C507>
                <D_2005>171</D_2005>
                <D_2380>2018-03-11</D_2380>
       </C_C507>
         </S_DTM>

    </G_SG1>
    <G_SG1>
        <S_RFF>
            <C_C506>
                <D_1153>ON</D_1153>
                <D_1154>454422</D_1154>
            </C_C506>
        </S_RFF>
         <!--datum naročila-->
         <S_DTM>
       <C_C507>
                <D_2005>171</D_2005>
                <D_2380>2018-03-12</D_2380>
       </C_C507>
         </S_DTM>
    </G_SG1>
```

Navedba več lokacij na nivoju glave računa je sicer možna, vendar se uporaba odsvetuje saj otežuje pregledno povezavo med številkami dobav, naročil in lokacijo dostave. V kolikor je vseeno potrebno zapisati več različnih lokacij dostave v glavi računa, se le-te lahko navedejo s ponavljanjem DELIVER TO ADDRESS (BG-15). Sicer pa se v primeru računa z dostavami na več lokacij priporoča uporaba načina, da se naročila, dobavnice in lokacije dostave zapisujejo na postavkah.

Primer zapisa dveh lokacij dostave v glavi računa:

```
<G_SG2>
            <S_NAD>
                <D_3035>DP</D_3035>
                <C_C082>
                    <D_3039>579000436070</D_3039>
                    <D_1131>0088</D_1131>
                </C_C082>
                <C_C080>
                    <D_3036>Logistic service ltd</D_3036>
                </C_C080>
                <C_C059>
                    <D_3042>Delivery street</D_3042>
                    <D_3042_2>Gate 15</D_3042_2>
                    <D_3042_3>Floor 2</D_3042_3>
                </C_C059>
                <D_3164>Delivery city</D_3164>
                <C_C819>
                    <D_3228>Jutland</D_3228>
                </C_C819>
                <D_3251>9000</D_3251>
                <D_3207>DK</D_3207>
            </S_NAD>
        </G_SG2>
       <G_SG2>
            <S_NAD>
                <D_3035>DP</D_3035>
                <C_C082>
                    <D_3039>579000436070</D_3039>
                    <D_1131>0088</D_1131>
                </C_C082>
                <C_C080>
```

```
            <D_3036>Logistic service ltd</D_3036>
        </C_C080>
        <C_C059>
            <D_3042>Delivery street 2</D_3042>
            <D_3042_2>Gate 30</D_3042_2>
            <D_3042_3>Floor 1</D_3042_3>
        </C_C059>
        <D_3164>Delivery city 2</D_3164>
        <C_C819>
            <D_3228>Jutland 2</D_3228>
        </C_C819>
        <D_3251>9001</D_3251>
        <D_3207>DK</D_3207>
    </S_NAD>
</G_SG2>
```

7.2 Podatki dobav in naročil na nivoju postavke računa

Tak način uporabe se priporoča predvsem v primeru, ko je račun za več dostav in/ali naročil na različne lokacije, saj omogoča povezavo med lokacijo, številko naročila in številko dobavnice.

Na posamezni postavki se navede dobavnico. Dobavnica se napiše kot v BT-16 le da se nahaja v segmentu <G_SG30>

Primer zapisa dobavnice na postavki računa:

```
<G_SG30>
    <S_RFF>
        <C_C506>
            <D_1153>AAK</D_1153>
            <D_1154>5433</D_1154>
        </C_C506>
    </S_RFF>
<!--datum dobavnice-->
<S_DTM>
    <C_C507>
        <D_2005>171</D_2005>
        <D_2380>2018-03-10</D_2380>
    </C_C507>
</S_DTM>
<!--datum dostave-->
<S_DTM>
    <C_C507>
        <D_2005>35</D_2005>
        <D_2380>2018-03-10</D_2380>
    </C_C507>
</S_DTM>

</G_SG30>
```

Na posamezni postavki se navede številko naročila. Številka naročila se napiše kot v BT-13 le da se nahaja v segmentu <G_SG30>

Primer zapisa naročila na postavki računa:

```
<G_SG30>
    <S_RFF>
        <C_C506>
            <D_1153>ON</D_1153>
            <D_1154>541133</D_1154>
        </C_C506>
    </S_RFF>
<!--datum naročila-->
```

```
            <S_DTM>
        <C_C507>
                <D_2005>171</D_2005>
                <D_2380>2018-03-12</D_2380>
        </C_C507>
      </S_DTM>
    </G_SG30>
```

Za posamezno postavko se navede tudi lokacija dostave. Lokacija dostave se zapiše kot DELIVER TO ADDRESS(BG-15) le da se nahaja v segmentu <G_SG35>

Primer zapisa lokacije dostave na postavki računa:

```
<G_SG35>
   <S_NAD>
       <D_3035>DP</D_3035>
       <C_C082>
           <D_3039>579000436070</D_3039>
           <D_1131>0088</D_1131>
       </C_C082>
       <C_C080>
           <D_3036>Logistic service ltd</D_3036>
       </C_C080>
       <C_C059>
           <D_3042>Delivery street 2</D_3042>
           <D_3042_2>Gate 30</D_3042_2>
           <D_3042_3>Floor 1</D_3042_3>
       </C_C059>
       <D_3164>Delivery city 2</D_3164>
       <C_C819>
           <D_3228>Jutland 2</D_3228>
       </C_C819>
       <D_3251>9001</D_3251>
       <D_3207>DK</D_3207>
   </S_NAD>
</G_SG35>
```

Dodatek A
(informativni)

Poslovni termini (BT)

A.1 Seznam in opis poslovnih terminov (BT) in skupin poslovnih terminov (BG)

Preglednica vsebuje seznam in opis poslovnih terminov ter XPath izraze e-SLOG 2.0.

Oznaka	Poslovni termin	Opis poslovnega termina	e-SLOG 2.0 XPath
BT-1	Številka računa	Edinstvena identifikacijska oznaka računa.	/Invoice/M_INVOIC/S_BGM/C_C106/D_1004
BT-2	Datum izstavitve računa	Datum, ko je bil izstavljen račun.	/Invoice/M_INVOIC/S_DTM[C_C507/D_2005='137']/C_C507/D_2380
BT-3	Koda tipa računa	Koda, ki določa funkcionalni tip računa.	/Invoice/M_INVOIC/S_BGM/C_C002/D_1001
BT-5	Koda valute računa	Valuta, v kateri so navedeni vsi zneski na računu, razen za znesek skupnega DDV v obračunski valuti.	/Invoice/M_INVOIC/G_SG7[S_CUX/C_C504/D_6347='2']/S_CUX/C_C504/D_6345
BT-6	Koda knjižne valute DDV	Valuta, uporabljana za namene obračuna in prijave DDV, kot je sprejeto ali zahtevano v državi prodajalca.	/Invoice/M_INVOIC/G_SG7[S_CUX/C_C504/D_6347='6']/S_CUX/C_C504/D_6345
BT-7	Datum nastanka obveznosti za DDV	Datum, ko nastane obveznost za DDV za prodajalca in za kupca, če je mogoče ta datum določiti in se razlikuje od datuma izdaje računa na podlagi direktive o DDV ...	/Invoice/M_INVOIC/S_DTM[C_C507/D_2005='131']/C_C507/D_2380
BT-8	Koda datuma nastanka obveznosti za DDV	Koda datuma nastanka obveznosti za DDV za prodajalca in za kupca.	/Invoice/M_INVOIC/S_DTM[C_C507/D_2005='3' or C_C507/D_2005='35' or C_C507/D_2005='432']/C_C507/D_2005
BT-9	Datum zapadlosti plačila	Datum na katerega zapade plačilo.	/Invoice/M_INVOIC/G_SG8[S_PAT/D_4279='1']/S_DTM[C_C507/D_2005='13']/C_C507/D_2380
BT-10	Referenčna oznaka kupca	Interni identifikator, ki ga dodeli kupec in služi za namene internega usmerjanja.	/Invoice/M_INVOIC/G_SG2[S_NAD/D_3035='BY']/G_SG3[S_RFF/C_C506/D_1153='CR']/S_RFF/C_C506/D_1154

Oznaka	Poslovni termin	Opis poslovnega termina	e-SLOG 2.0 XPath
BT-11	Referenčna številka projekta	Identifikacija projekta na katerega se račun nanaša.	/Invoice/M_INVOIC/G_SG1[S_RFF/C_C506/D_1153='AEP']/S_RFF/C_C506/D_1154
BT-12	Referenčna oznaka pogodbe	Identifikacija pogodbe.	/Invoice/M_INVOIC/G_SG1[S_RFF/C_C506/D_1153='CT']/S_RFF/C_C506/D_1154
BT-13	Referenčna oznaka nabavnega naročila.	Identifikator obravnavanega nabavnega naročila, ki ga je izstavil kupec.	/Invoice/M_INVOIC/G_SG1[S_RFF/C_C506/D_1153='ON']/S_RFF/C_C506/D_1154
BT-14	Referenčna oznaka prodajnega naročila	Identifikator obravnavanega prodajnega naročila, ki ga je izstavil prodajalec.	/Invoice/M_INVOIC/G_SG1[S_RFF/C_C506/D_1153='VN']/S_RFF/C_C506/D_1154
BT-15	Referenčna oznaka prejemnice	Identifikator obravnavane prejemnice.	/Invoice/M_INVOIC/G_SG1[S_RFF/C_C506/D_1153='ALO']/S_RFF/C_C506/D_1154
BT-16	Sklicna številka odpremnice	Identifikator obravnavane odpremnice.	/Invoice/M_INVOIC/G_SG1[S_RFF/C_C506/D_1153='AAK']/S_RFF/C_C506/D_1154
BT-17	Referenčna oznaka razpisa ali sklopa	Identifikator razpisa za zbiranje ponudb ali sklopa, na katerega se nanaša račun.	/Invoice/M_INVOIC/G_SG1[S_RFF/C_C506/D_1153='GC']/S_RFF/C_C506/D_1154
BT-18	Identifikator zaračunanega objekta	Identifikator razpisa za zbiranje ponudb ali sklopa, na katerega se nanaša račun.	/Invoice/M_INVOIC/G_SG1[S_RFF/C_C506/D_1153='ATS']/S_RFF/C_C506/D_1154
BT-18-1	Identifikator stalne sheme za oddajo ponudb	Identifikator identifikacijske sheme zaračunanega identifikatorja objekta	/Invoice/M_INVOIC/G_SG1/S_RFF/C_C506/D_1153='ATS'
BT-19	Referenčna oznaka računovodskega konta kupca	Besedilna vrednost ki opredeljuje mesto knjiženja ustreznih podatkov v finančnih kontih kupca.	/Invoice/M_INVOIC/G_SG2[S_NAD/D_3035='BY']/G_SG3[S_RFF/C_C506/D_1153='AOU']/S_RFF /C_C506/D_1154
BT-20	Plačilni pogoji	Besedilni opis plačilnih pogojev ki veljajo za zapadlo plačilo (vključno z opisom morebitnih pogodbenih glob)	/Invoice/M_INVOIC/S_FTX[D_4451='AAB']/C_C108/D_4440
BG-1	IZJAVA NA RAČUNU	Skupina poslovnih izrazov v obliki besednih izjav, ki zadevajo račun, skupaj z navedbo predmeta izjave.	
BT-21	Koda predmeta izjave na računu.	Predmet besedne izjave v nadaljevanju.	/Invoice/M_INVOIC/S_FTX/D_4451='GEN'

Oznaka	Poslovni termin	Opis poslovnega termina	e-SLOG 2.0 XPath
BT-22	Izjava na računu	Besedilna izjava, ki podaja nestrukturirano informacijo, ki se nanaša na račun kot celoto.	/Invoice/M_INVOIC/S_FTX[D_4451='GEN']/C_C108/D_4440
BG-2	NADZOR PROCESA	Skupina poslovnih izrazov, ki zagotavlja informacije o poslovnem procesu in veljavna pravila zanj.	
BT-23	Tip poslovnega procesa	Označuje kontekst poslovnega procesa v katerem se transakcija pojavlja, da lahko kupec obdela račun na primeren način.	/Invoice/M_INVOIC/S_FTX[D_4451='DOC']/C_C107/D_4441
BT-24	Identifikator specifikacije	Identifikacija specifikacije, ki vsebuj popoln nabor pravil glede semantične vsebine, načela in poslovna pravila, ki jim zadoščajo podatki, vsebovani v instančnem dokumentu.	/Invoice/M_INVOIC/S_FTX[D_4451='DOC']/C_C108/D_4440
BG-3	REFERENČNA OZNAKA PREDHODNEGA RAČUNA	Skupina poslovnih izrazov, ki zagotavlja informacije o enem ali več predhodnih računih.	
BT-25	Številka predhodnega računa	Identifikacija računa, ki ga je prodajalec predhodno poslal.	/Invoice/M_INVOIC/G_SG1[S_RFF/C_C506/D_1153='OI']/S_RFF/C_C506/D_1154
BT-26	Datum izdaje predhodnega računa.	Datum, ko je bil izstavljen predhodni račun.	/Invoice/M_INVOIC/G_SG1[S_RFF/C_C506/D_1153='OI']/S_DTM[C_C507/D_2005='384']/C_C507/D_2380
BG-5	PRODAJALEC	Skupina poslovnih izrazov, ki zagotavlja informacije o prodajalcu.	
BT-27	Naziv prodajalca:	Popoln uradni naziv s katerim je prodajalec registriran v nacionalnem registru pravnih oseb ali kot davčni zavezanec ali ki na drug način trguje kot oseba ali osebe.	/Invoice/M_INVOIC/G_SG2[S_NAD/D_3035='SE']/S_NAD/C_C080/D_3036
BT-28	Trgovski naziv prodajalca	Naziv po katerem je prodajalec znan, ki je drugačen od registriranega naziva prodajalca (znan tudi kot poslovni naziv).	/Invoice/M_INVOIC/G_SG2[S_NAD/D_3035='SE']/S_NAD/C_C080/D_3036_2
BT-29	Identifikator prodajalca	Identifikacija prodajalca.	/Invoice/M_INVOIC/G_SG2[S_NAD/D_3035='SE']/S_NAD/C_C082/D_3039

Oznaka	Poslovni termin	Opis poslovnega termina	e-SLOG 2.0 XPath
BT-29-1	Identifikator identifikacijske sheme identifikatorja prodajalca	Identifikator identifikacijske sheme identifikatorja prodajalca.	/Invoice/M_INVOIC/G_SG2[S_NAD/D_3035='SE']/S_NAD/C_C082/D_1131
BT-30	Uradni registracijski identifikator prodajalca	Identifikator, ki ga je podelil uradni register, ki označuje prodajalca kot pravno ali fizično osebo.	/Invoice/M_INVOIC/G_SG2[S_NAD/D_3035='SE']/G_SG3[S_RFF/C_C506/D_1153='GN']/S_RFF/C_C506/D_1154
BT-30-1	Identifikator identifikacijske sheme uradnega registracijskega identifikatorja prodajalca	Identifikator identifikacijske sheme uradnega registracijskega identifikatorja prodajalca.	/Invoice/M_INVOIC/G_SG2[S_NAD/D_3035='SE']/G_SG3/S_RFF/C_C506/D_1153='GN'
BT-31	Identifikator prodajalca za DDV	Identifikator prodajalca za DDV (znan tudi kot prodajalčeva identifikacijska številka za DDV).	/Invoice/M_INVOIC/G_SG2[S_NAD/D_3035='SE']/G_SG3[S_RFF/C_C506/D_1153='VA']/S_RFF/C_C506/D_1154
BT-32	Uradni davčni registracijski identifikator prodajalca	Lokalna identifikacija (ki jo opredeljuje naslov prodajalca) prodajalca za davčne namene ali referenčna oznaka, ki prodajalcu omogoča navedbo svojega registriranega davčnega statusa.	/Invoice/M_INVOIC/G_SG2[S_NAD/D_3035='SE']/G_SG3[S_RFF/C_C506/D_1153='AHP']/S_RFF/C_C506/D_1154
BT-33	Dodatne uradne informacije o prodajalcu	Dodatne ustrezne uradne informacije o prodajalcu.	/Invoice/M_INVOIC/S_FTX[D_4451='REG']/C_C108/D_4440
BT-34	Elektronski naslov prodajalca	Identificira elektronski naslov prodajalca, na katerega se lahko dostavi poslovni dokument.	/Invoice/M_INVOIC/G_SG2[S_NAD/D_3035='SE']/G_SG5[S_CTA/D_3139='IC']/S_COM[C_C076/D_3155='EM']/C_C076/D_3148
BT-34-1	Identifikator identifikacijske sheme elektronskega naslova prodajalca.	Identifikator identifikacijske sheme identifikatorja elektronskega naslova prodajalca.	/Invoice/M_INVOIC/G_SG2[S_NAD/D_3035='SE']/G_SG5[S_CTA/D_3139='IC']/S_COM/C_C076/D_3155='EM'
BG-5	POŠTNI NASLOV PRODAJALCA	Skupina poslovnih izrazov, ki zagotavlja informacije o naslovu prodajalca.	
BT-35	Naslovna vrstica prodajalca 1	Glavna naslovna vrstica v naslovu	/Invoice/M_INVOIC/G_SG2[S_NAD/D_3035='SE']/S_NAD/C_C059/D_3042

Oznaka	Poslovni termin	Opis poslovnega termina	e-SLOG 2.0 XPath
BT-36	Naslovna vrstica prodajalca 2	Dodatna naslovna vrstica v naslovu ki se lahko uporabi za navedbo dodatnih podrobnosti, ki pojasnjujejo glavno naslovno vrstico.	/Invoice/M_INVOIC/G_SG2[S_NAD/D_3035='SE']/S_NAD/C_C059/D_3042_2
BT-162	Naslovna vrstica prodajalca 3	Dodatna naslovna vrstica v naslovu ki se lahko uporabi za navedbo dodatnih podrobnosti, ki pojasnjujejo glavno naslovno vrstico.	/Invoice/M_INVOIC/G_SG2[S_NAD/D_3035='SE']/S_NAD/C_C059/D_3042_3
BT-37	Mesto prodajalca	Običajno ime mesta, kraja ali vasi, kjer se nahaja naslov proizvajalca.	/Invoice/M_INVOIC/G_SG2[S_NAD/D_3035='SE']/S_NAD/D_3164
BT-38	Poštna številka prodajalca	Identifikator za naslovljivo skupino lastnosti skladno z ustrezno poštno službo.	/Invoice/M_INVOIC/G_SG2[S_NAD/D_3035='SE']/S_NAD/D_3251
BT-39	Pokrajina prodajalca	Pokrajina v državi.	/Invoice/M_INVOIC/G_SG2[S_NAD/D_3035='SE']/S_NAD/C_C819/D_3228
BT-40	Koda države prodajalca	Koda, ki označuje državo	/Invoice/M_INVOIC/G_SG2[S_NAD/D_3035='SE']/S_NAD/D_3207
BG-6	KONTAKTNI PODATKI PRODAJALCA	Skupina poslovnih izrazov, ki zagotavlja kontaktne informacije prodajalca.	
BT-41	Kontaktna točka prodajalca	Kontaktna točka za pravno ali fizično osebo.	/Invoice/M_INVOIC/G_SG2[S_NAD/D_3035='SE']/G_SG5[S_CTA/D_3139='SU']/S_CTA/C_C056/D_3412
BT-42	Kontaktna telefonska številka prodajalca	Telefonska številka kontaktne točke.	/Invoice/M_INVOIC/G_SG2[S_NAD/D_3035='SE']/G_SG5[S_CTA/D_3139='SU']/S_COM[C_C076/D_3155='TE']/C_C076/D_3148
BT-43	Kontaktni elektronski naslov prodajalca	Elektronski naslov kontaktne točke.	/Invoice/M_INVOIC/G_SG2[S_NAD/D_3035='SE']/G_SG5[S_CTA/D_3139='SU']/S_COM[C_C076/D_3155='EM']/C_C076/D_3148
BG-7	KUPEC	Skupina poslovnih izrazov, ki zagotavlja informacije o kupcu.	
BT-44	Naziv kupca	Popolni naziv kupca.	/Invoice/M_INVOIC/G_SG2[S_NAD/D_3035='BY']/S_NAD/C_C080/D_3036
BT-45	Trgovski naziv kupca	Naziv po katerem je kupec znan, ki je drugačen od registriranega naziva kupca (znan tudi kot poslovni naziv).	/Invoice/M_INVOIC/G_SG2[S_NAD/D_3035='BY']/S_NAD/C_C080/D_3036_2
BT-46	Identifikator kupca	Identifikator kupca.	/Invoice/M_INVOIC/G_SG2[S_NAD/D_3035='BY']/S_NAD/C_C082/D_3039

Oznaka	Poslovni termin	Opis poslovnega termina	e-SLOG 2.0 XPath
BT-46-1	Identifikator identifikacijske sheme indikatorja kupca	Identifikator identifikacijske sheme identifikatorja kupca.	/Invoice/M_INVOIC/G_SG2[S_NAD/D_3035='BY']/S_NAD/C_C082/D_1131
BT-47	Uradni registracijski identifikator kupca	Identifikator, ki ga je podelil uradni register, ki označuje kupca kot pravno ali fizično osebo.	/Invoice/M_INVOIC/G_SG2[S_NAD/D_3035='BY']/G_SG3[S_RFF/C_C506/D_1153='GN']/S_RFF/C_C506/D_1154
BT-47-1	Identifikator identifikacijske sheme uradnega registracijskega identifikatorja kupca.	Identifikator identifikacijske sheme uradnega registracijskega identifikatorja kupca.	/Invoice/M_INVOIC/G_SG2[S_NAD/D_3035='BY']/G_SG3/S_RFF/C_C506/D_1153='GN'
BT-48	Identifikator kupca za DDV	Identifikator kupca za DDV (znan tudi kot kupčeva identifikacijska številka za DDV).	/Invoice/M_INVOIC/G_SG2[S_NAD/D_3035='BY']/G_SG3[S_RFF/C_C506/D_1153='VA']/S_RFF/C_C506/D_1154
BT-49	Elektronski naslov kupca	Identificira elektronski naslov kupca, na katerega se lahko dostavi poslovni dokument.	/Invoice/M_INVOIC/G_SG2[S_NAD/D_3035='BY']/G_SG5[S_CTA/D_3139='IC']/S_COM[C_C076/D_3155='EM']/C_C076/D_3148
BT-49-1	Identifikator identifikacijske sheme elektronskega naslova kupca.	Identifikator identifikacijske sheme identifikatorja elektronskega naslova kupca.	/Invoice/M_INVOIC/G_SG2[S_NAD/D_3035='BY']/G_SG5[S_CTA/D_3139='IC']/S_COM/C_C076/D_3155='EM'
BG-8	POŠTNI NASLOV KUPCA	Skupina poslovnih izrazov, ki zagotavlja informacije o naslovu kupca.	
BT-50	Naslovna vrstica kupca 1	Glavna naslovna vrstica v naslovu	/Invoice/M_INVOIC/G_SG2[S_NAD/D_3035='BY']/S_NAD/C_C059/D_3042
BT-51	Naslovna vrstica kupca 2	Dodatna naslovna vrstica v naslovu ki se lahko uporabi za navedbo dodatnih podrobnosti, ki pojasnjujejo glavno naslovno vrstico.	/Invoice/M_INVOIC/G_SG2[S_NAD/D_3035='BY']/S_NAD/C_C059/D_3042_2
BT-163	Naslovna vrstica kupca 3	Dodatna naslovna vrstica v naslovu ki se lahko uporabi za navedbo dodatnih podrobnosti, ki pojasnjujejo glavno naslovno vrstico.	/Invoice/M_INVOIC/G_SG2[S_NAD/D_3035='BY']/S_NAD/C_C059/D_3042_3
BT-52	Mesto kupca	Običajno ime mesta, kraja ali vasi, kjer se nahaja naslov kupca.	/Invoice/M_INVOIC/G_SG2[S_NAD/D_3035='BY']/S_NAD/D_3164

Oznaka	Poslovni termin	Opis poslovnega termina	e-SLOG 2.0 XPath
BT-53	Poštna številka kupca	Identifikator za naslovljivo skupino lastnosti skladno z ustrezno poštno službo.	/Invoice/M_INVOIC/G_SG2[S_NAD/D_3035='BY']/S_NAD/D_3251
BT-54	Pokrajina kupca	Pokrajina v državi.	/Invoice/M_INVOIC/G_SG2[S_NAD/D_3035='BY']/S_NAD/C_C819/D_3228
BT-55	Koda države kupca	Koda, ki označuje državo.	/Invoice/M_INVOIC/G_SG2[S_NAD/D_3035='BY']/S_NAD/D_3207
BG-9	KONTAKTNI PODATKI KUPCA	Skupina poslovnih izrazov, ki zagotavlja kontaktne informacije kupca.	
BT-56	Kontaktna točka kupca	Kontaktna točka za pravno ali fizično osebo.	/Invoice/M_INVOIC/G_SG2[S_NAD/D_3035='BY']/G_SG5[S_CTA/D_3139='PD']/S_CTA/C_C056/D_3413
BT-57	Kontaktna telefonska številka kupca	Telefonska številka kontaktne točke.	/Invoice/M_INVOIC/G_SG2[S_NAD/D_3035='BY']/G_SG5[S_CTA/D_3139='PD']/S_COM[C_C076/D_3155='TE']/C_C076/D_3148
BT-58	Kontaktni elektronski naslov kupca	Elektronski naslov kontaktne točke.	/Invoice/M_INVOIC/G_SG2[S_NAD/D_3035='BY']/G_SG5[S_CTA/D_3139='PD']/S_COM[C_C076/D_3155='EM']/C_C076/D_3148
BG-10	PREJEMNIK PLAČILA	Skupina poslovnih izrazov, ki zagotavlja informacije o prejemniku plačila, to je naslovnika, ki prejme plačilo.	
BT-59	Naziv prejemnika plačila	Naziv prejemnika plačila.	/Invoice/M_INVOIC/G_SG2[S_NAD/D_3035='PE']/S_NAD/C_C080/D_3036
BT-60	Identifikator prejemnika plačila	Identifikator za prejemnika plačila.	/Invoice/M_INVOIC/G_SG2[S_NAD/D_3035='PE']/S_NAD/C_C082/D_3039
BT-60-1	Identifikator identifikacijske sheme identifikatorja prejemnika plačila	Identifikator identifikacijske sheme identifikatorja prejemnika plačila.	/Invoice/M_INVOIC/G_SG2[S_NAD/D_3035='PE']/S_NAD/C_C082/D_1131
BT-61	Uradni registracijski identifikator prejemnika plačila	Identifikator, ki ga je podelil uradni register, ki označuje prejemnika plačila kot pravno ali fizično osebo.	/Invoice/M_INVOIC/G_SG2[S_NAD/D_3035='PE']/G_SG3[S_RFF/C_C506/D_1153='GN']/S_RFF/C_C506/D_1154
BT-61-1	Identifikator identifikacijske sheme uradnega registracijskega identifikatorja prejemnika plačila.	Identifikator identifikacijske sheme uradnega registracijskega identifikatorja prejemnika plačila.	/Invoice/M_INVOIC/G_SG2[S_NAD/D_3035='PE']/G_SG3/S_RFF/C_C506/D_1153='GN'

Oznaka	Poslovni termin	Opis poslovnega termina	e-SLOG 2.0 XPath
BG-11	DAVČNI ZASTOPNIK PRODAJALCA	Skupina poslovnih izrazov, ki zagotavlja informacije o davčnem zastopniku prodajalca.	
BT-62	Naziv davčnega zastopnika prodajalca	Popolni naziv davčnega zastopnika prodajalca.	/Invoice/M_INVOIC/G_SG2[S_NAD/D_3035='LC']/S_NAD/C_C080/D_3036
BT-63	Identifikator davčnega zastopnika prodajalca za DDV	Identifikator davčnega zastopnika prodajalca za DDV.	/Invoice/M_INVOIC/G_SG2[S_NAD/D_3035='LC']/G_SG3[S_RFF/C_C506/D_1153='VA']/S_RFF/C_C506/D_1154
BG-12	POŠTNI NASLOV DAVČNEGA ZASTOPNIKA PRODAJALCA	Skupina poslovnih izrazov, ki zagotavlja informacije o naslovu davčnega zastopnika prodajalca.	
BT-64	Naslovna vrstica davčnega zastopnika prodajalca 1	Glavna naslovna vrstica v naslovu	/Invoice/M_INVOIC/G_SG2[S_NAD/D_3035='LC']/S_NAD/C_C059/D_3042
BT-65	Naslovna vrstica davčnega zastopnika prodajalca 2	Dodatna naslovna vrstica v naslovu ki se lahko uporabi za navedbo dodatnih podrobnosti, ki pojasnjujejo glavno naslovno vrstico.	/Invoice/M_INVOIC/G_SG2[S_NAD/D_3035='LC']/S_NAD/C_C059/D_3042_2
BT-164	Naslovna vrstica davčnega zastopnika prodajalca 3	Dodatna naslovna vrstica v naslovu ki se lahko uporabi za navedbo dodatnih podrobnosti, ki pojasnjujejo glavno naslovno vrstico.	/Invoice/M_INVOIC/G_SG2[S_NAD/D_3035='LC']/S_NAD/C_C059/D_3042_3
BT-66	Mesto davčnega zastopnika prodajalca	Običajno ime mesta, kraja ali vasi, kjer se nahaja naslov davčnega zastopnika prodajalca.	/Invoice/M_INVOIC/G_SG2[S_NAD/D_3035='LC']/S_NAD/D_3164
BT-67	Poštna številka davčnega zastopnika prodajalca	Identifikator za naslovljivo skupino lastnosti skladno z ustrezno poštno službo.	/Invoice/M_INVOIC/G_SG2[S_NAD/D_3035='LC']/S_NAD/D_3251
BT-68	Pokrajina davčnega zastopnika prodajalca	Pokrajina v državi.	/Invoice/M_INVOIC/G_SG2[S_NAD/D_3035='LC']/S_NAD/C_C819/D_3228
BT-69	Koda države davčnega zastopnika prodajalca	Koda, ki označuje državo.	/Invoice/M_INVOIC/G_SG2[S_NAD/D_3035='LC']/S_NAD/D_3207

Oznaka	Poslovni termin	Opis poslovnega termina	e-SLOG 2.0 XPath
BG-13	INFORMACIJA O DOBAVI	Skupina poslovnih izrazov, ki zagotavlja informacije o kraju in času dobave zaračunanega blaga in storitev.	
BT-70	Prejemnik dobave	Naziv prejemnika dobavljenega blaga in storitev.	/Invoice/M_INVOIC/G_SG2[S_NAD/D_3035='DP']/S_NAD/C_C080/D_3036
BT-71	Identifikator kraja dobave	Identifikator za lokacijo kraja dobave blaga in storitev.	/Invoice/M_INVOIC/G_SG2[S_NAD/D_3035='DP']/S_NAD/C_C082/D_3039
BT-71-1	Identifikator identifikacijske sheme identifikatorja kraja dobave	Identifikator identifikacijske sheme identifikatorja kraja dobave.	/Invoice/M_INVOIC/G_SG2[S_NAD/D_3035='DP']/S_NAD/C_C082/D_1131
BT-72	Dejanski datum dobave	Datum izvedene dobave.	/Invoice/M_INVOIC/S_DTM[C_C507/D_2005='35']/C_C507/D_2380
BG-14	OBDOBJE DOBAVE ALI RAČUNA	Skupina poslovnih izrazov, ki zagotavlja informacije o obdobju računa.	
BT-73	Začetek obdobja računa	Datum začetka obdobja računa.	/Invoice/M_INVOIC/S_DTM[C_C507/D_2005='167']/C_C507/D_2380
BT-74	Konec obdobja računa	Datum konca obdobja računa.	/Invoice/M_INVOIC/S_DTM[C_C507/D_2005='168']/C_C507/D_2380
BG-15	NASLOV ZA DOBAVO	Skupina poslovnih izrazov, ki zagotavlja informacije o naslovu za dobavo zaračunanega blaga in storitev.	
BT-75	Naslovna vrstica za dobavo 1	Glavna naslovna vrstica v naslovu	/Invoice/M_INVOIC/G_SG2[S_NAD/D_3035='DP']/S_NAD/C_C059/D_3042
BT-76	Naslovna vrstica za dobavo 2	Dodatna naslovna vrstica v naslovu ki se lahko uporabi za navedbo dodatnih podrobnosti, ki pojasnjujejo glavno naslovno vrstico.	/Invoice/M_INVOIC/G_SG2[S_NAD/D_3035='DP']/S_NAD/C_C059/D_3042_2
BT-165	Naslovna vrstica za dobavo 3	Dodatna naslovna vrstica v naslovu ki se lahko uporabi za navedbo dodatnih podrobnosti, ki pojasnjujejo glavno naslovno vrstico.	/Invoice/M_INVOIC/G_SG2[S_NAD/D_3035='DP']/S_NAD/C_C059/D_3042_3

Oznaka	Poslovni termin	Opis poslovnega termina	e-SLOG 2.0 XPath
BT-77	Mesto dobave	Običajno ime mesta, kraja ali vasi, kjer se nahaja naslov za dobavo.	/Invoice/M_INVOIC/G_SG2[S_NAD/D_3035='DP']/S_NAD/D_3164
BT-78	Poštna številka za dobavo	Identifikator za naslovljivo skupino lastnosti skladno z ustrezno poštno službo.	/Invoice/M_INVOIC/G_SG2[S_NAD/D_3035='DP']/S_NAD/D_3251
BT-79	Pokrajina dobave	Pokrajina v državi.	/Invoice/M_INVOIC/G_SG2[S_NAD/D_3035='DP']/S_NAD/C_C819/D_3228
BT-80	Koda države dobave	Koda, ki označuje državo.	/Invoice/M_INVOIC/G_SG2[S_NAD/D_3035='DP']/S_NAD/D_3207
BG-16	NAVODILA ZA PLAČILO	Skupina poslovnih izrazov, ki zagotavlja informacije o plačilu.	
BT-81	Koda tipa plačilnega sredstva	Pričakovano ali uporabljeno plačilno sredstvo izraženo kot koda.	/Invoice/M_INVOIC/G_SG8[S_PAT/D_4279='1']/S_PAI/C_C534/D_4461
BT-82	Besedilo plačilnega sredstva	Pričakovano ali uporabljeno plačilno sredstvo izraženo kot besedilo.	/Invoice/M_INVOIC/S_FTX[D_4451='AAT']/C_C108/D_4440
BT-83	Informacija o nakazilu	Besedilna vrednost, ki se uporablja za vzpostavitev povezave med plačilom in računom, ki ga je izstavil prodajalec.	/Invoice/M_INVOIC/G_SG1[S_RFF/C_C506/D_1153='PQ']/S_RFF/C_C506/D_1154
BG-17	KREDITNO PLAČILO	Skupina poslovnih izrazov za opredelitev kreditnih plačil.	
BT-84	Identifikator računa plačila	Edinstven identifikator finančnega plačilnega računa pri izvajalcu plačilnih storitev na katerega se mora plačilo opraviti.	/Invoice/M_INVOIC/G_SG2[S_NAD/D_3035='SE']/S_FII[D_3035='RB']/C_C078/D_3194
BT-85	Naziv plačilnega računa	Naziv plačilnega računa pri izvajalcu plačilnih storitev na katerega se mora plačilo opraviti.	/Invoice/M_INVOIC/G_SG2[S_NAD/D_3035='SE']/S_FII[D_3035='RB']/C_C078/D_3192
BT-86	Identifikator izvajalca plačilnih storitev	Identifikator za izvajalca plačilnih storitev pri katerem se nahaja plačilni račun.	/Invoice/M_INVOIC/G_SG2[S_NAD/D_3035='SE']/S_FII[D_3035='RB']/C_C088/D_3433

Oznaka	Poslovni termin	Opis poslovnega termina	e-SLOG 2.0 XPath
BG-18	INFORMACIJA O PLAČILNI KARTICI	Skupina poslovnih izrazov ki zagotavlja informacije o kartici, uporabljeni za plačilo sočasno z izdajo računa.	
BT-87	Celotna številka plačilne kartice	Celotna številka plačilne kartice (PAN) tiste kartice, ki je bila uporabljena za plačilo.	/Invoice/M_INVOIC/G_SG2[S_NAD/D_3035='BY']/S_FII[D_3035='PB']/C_C078/D_3194
BT-88	Ime in priimek imetnika plačilne kartice	Ime in priimek imetnika plačilne kartice.	/Invoice/M_INVOIC/G_SG2[S_NAD/D_3035='BY']/S_FII[D_3035='PB']/C_C078/D_3192
BG-19	DIREKTNA OBREMENITEV	Skupina poslovnih izrazov, ki opisuje direktno obremenitev.	
BT-89	Referenčni indikator pooblastila	Edinstven identifikator, ki ga je določil prejemnik plačila za sklicevanje na pooblastilo z direktno obremenitev.	/Invoice/M_INVOIC/G_SG2[S_NAD/D_3035='BY']/G_SG3[S_RFF/C_C506/D_1153='AVS']/S_RFF/C_C506/D_1154
BT-90	Bančno določen identifikator upnika	Edinstven bančni referenčni identifikator prejemnika plačila ali prodajalca, ki ga določi banka prejemnika ali prodajalca.	/Invoice/M_INVOIC/G_SG2[S_NAD/D_3035='BY']/G_SG3[S_RFF/C_C506/D_1153='AII']/S_RFF/C_C506/D_1154
BT-91	Identifikator obremenjenega računa	Račun, ki bo obremenjen z direktnim plačilom.	/Invoice/M_INVOIC/G_SG2[S_NAD/D_3035='BY']/S_FII[D_3035='BI']/C_C078/D_3194
BG-20	POPUSTI NA RAVNI DOKUMENTA	Skupina poslovnih izrazov, ki zagotavljajo informacije o popustih, ki veljajo za račun kot celoto.	
BT-92	Znesek popusta na ravni dokumenta	Znesek popusta brez DDV.	/Invoice/M_INVOIC/G_SG16[S_ALC/D_5463='A']/G_SG20[S_MOA/C_C516/D_5025='204']/S_MOA/C_C516/D_5004
BT-93	Znesek osnove za popust na ravni dokumenta	Znesek osnove za popust, ki se lahko uporabi v povezavi z odstotkom popusta na ravni dokumenta za izračun zneska popusta na ravni dokumenta.	/Invoice/M_INVOIC/G_SG16[S_ALC/D_5463='A']/G_SG20[S_MOA/C_C516/D_5025='25']/S_MOA/C_C516/D_5004
BT-94	Odstotek popusta na ravni dokumenta	Odstotek, ki se lahko uporabi v povezavi z zneskom osnove za popust na ravni dokumenta za izračun zneska popusta na ravni dokumenta.	/Invoice/M_INVOIC/G_SG16[S_ALC/D_5463='A']/G_SG19[S_PCD/C_C501/D_5245='1']/S_PCD/C_C501/D_5482

Oznaka	Poslovni termin	Opis poslovnega termina	e-SLOG 2.0 XPath
BT-95	Koda kategorije DDV za popust na ravni dokumenta	Kodirana identifikacija kategorije DDV, ki velja za popust na ravni dokumenta.	/Invoice/M_INVOIC/G_SG16[S_ALC/D_5463='A']/G_SG22[S_TAX/D_5283='7' and S_TAX/C_C241/D_5153='VAT']/S_TAX/D_5305
BT-96	Stopnja DDV za popust na ravni dokumenta	Stopnja DDV, izražena kot odstotek, ki velja za popust na ravni dokumenta.	/Invoice/M_INVOIC/G_SG16[S_ALC/D_5463='A']/G_SG22[S_TAX/D_5283='7' and S_TAX/C_C241/D_5153='VAT']/S_TAX/C_C243/D_5278
BT-97	Razlog popusta na ravni dokumenta	Razlog popusta na ravni dokumenta, izražen kot besedilo.	/Invoice/M_INVOIC/G_SG16[S_ALC/D_5463=‘A’]/S_ALC/C_C552/D_1230
BT-98	Koda razloga popusta na ravni dokumenta	Razlog popusta na ravni dokument, izražen kot koda.	/Invoice/M_INVOIC/G_SG16[S_ALC/D_5463=‘A’]/S_ALC/C_C552/D_5189
BG-21	Dajatve na ravni dokumenta	Skupina poslovnih izrazov, ki zagotavljajo informacije o dajatvah in davkih poleg DDV, ki veljajo za račun kot celoto.	
BT-99	Dajatve na ravni dokumenta	Znesek dajatev brez DDV.	/Invoice/M_INVOIC/G_SG16[S_ALC/D_5463='C']/G_SG20[S_MOA/C_C516/D_5025='23']/S_MOA/C_C516/D_5004
BT-100	Znesek osnove za dajatve na ravni dokumenta	Znesek osnove, ki se lahko uporabi v povezavi z odstotkom za dajatve na ravni dokumenta za izračun zneska dajatev na ravni dokumenta.	/Invoice/M_INVOIC/G_SG16[S_ALC/D_5463='C']/G_SG20[S_MOA/C_C516/D_5025='25']/S_MOA/C_C516/D_5004
BT-101	Odstotek dajatev na ravni dokumenta	Odstotek, ki se lahko uporabi v povezavi z zneskom osnove za dajatve na ravni dokumenta za izračun zneska dajatev na ravni dokumenta.	/Invoice/M_INVOIC/G_SG16[S_ALC/D_5463='C']/G_SG19[S_PCD/C_C501/D_5245='2']/S_PCD/C_C501/D_5482
BT-102	Koda kategorije DDV za dajatve na ravni dokumenta	Kodirana identifikacija kategorije DDV, ki se uporablja za dajatve na ravni dokumenta.	/Invoice/M_INVOIC/G_SG16[S_ALC/D_5463='C']/G_SG22[S_TAX/D_5283='7' and S_TAX/C_C241/D_5153='VAT']/S_TAX/D_5305
BT-103	Stopnja DDV za dajatve na ravni dokumenta	Stopnja DDV, izražena kot odstotek, ki velja za dajatve na ravni dokumenta.	/Invoice/M_INVOIC/G_SG16[S_ALC/D_5463='C']/G_SG22[S_TAX/D_5283='7' and S_TAX/C_C241/D_5153='VAT']/S_TAX/C_C243/D_5278
BT-104	Razlog za dajatve na ravni dokumenta	Razlog za dajatve na ravni dokumenta, izražen kot besedilo.	/Invoice/M_INVOIC/G_SG16[S_ALC/D_5463=‘C’]/S_ALC/C_C552/D_1230

Oznaka	Poslovni termin	Opis poslovnega termina	e-SLOG 2.0 XPath
BT-105	Koda razloga za dajatve na ravni dokumenta	Razlog za dajatve na ravni dokumenta, izražen kot koda.	/Invoice/M_INVOIC/G_SG16[S_ALC/D_5463='C']/S_ALC/C_C214/D_7161
BG-22	SEŠTEVKI DOKUMENTA	Skupina poslovnih izrazov, ki zagotavljajo denarne seštevke za račun.	
BT-106	Vsota neto zneskov postavk računa	Vsota neto zneskov vseh postavk računa.	/Invoice/M_INVOIC/G_SG50[S_MOA/C_C516/D_5025='79']/S_MOA/C_C516/D_5004
BT-107	Vsota popustov na ravni dokumenta	Vsota vseh popustov na ravni dokumenta v računu.	/Invoice/M_INVOIC/G_SG50[S_MOA/C_C516/D_5025='260']/S_MOA/C_C516/D_5004
BT-108	Vsota dajatev na ravni dokumenta	Vsota vseh dajatev na ravni dokumenta v računu.	/Invoice/M_INVOIC/G_SG50[S_MOA/C_C516/D_5025='259']/S_MOA/C_C516/D_5004
BT-109	Skupni znesek računa brez DDV	Skupni znesek računa brez DDV.	/Invoice/M_INVOIC/G_SG50[S_MOA/C_C516/D_5025='389']/S_MOA/C_C516/D_5004
BT-110	Skupni znesek DDV za račun	Skupni znesek DDV za račun.	/Invoice/M_INVOIC/G_SG50[S_MOA/C_C516/D_5025='176']/S_MOA/C_C516/D_5004
BT-111	Skupni znesek DDV za račun v obračunski valuti	Skupni znesek DDV izražen v obračunski valuti, sprejeti ali zahtevani v državi prodajalca.	/Invoice/M_INVOIC/G_SG50[S_MOA/C_C516/D_5025='2']/S_MOA/C_C516/D_5004
BT-112	Skupni znesek računa z DDV	Skupni znesek računa z DDV.	/Invoice/M_INVOIC/G_SG50[S_MOA/C_C516/D_5025='388']/S_MOA/C_C516/D_5004
BT-113	Že plačan znesek	Vsota zneskov predplačil.	/Invoice/M_INVOIC/G_SG50[S_MOA/C_C516/D_5025='113']/S_MOA/C_C516/D_5004
BT-114	Znesek zaokrožitve	Znesek, ki ga je potrebno dodati skupnemu znesku računa zaradi zaokrožitve zneska za plačilo.	/Invoice/M_INVOIC/G_SG50[S_MOA/C_C516/D_5025='366']/S_MOA/C_C516/D_5004
BT-115	Znesek za plačilo	Preostali znesek, ki mora biti plačan.	/Invoice/M_INVOIC/G_SG50[S_MOA/C_C516/D_5025='9']/S_MOA/C_C516/D_5004
BG-23	RAZČLENITEV DDV	Skupina poslovnih izrazov, ki zagotavljajo informacije o razčlenitvi DDV po posameznih kategorijah, stopnjah in razlogih za oprostitev.	
BT-116	Znesek obdavčljive osnove za kategorijo DDV	Vsota vseh zneskov, ki so predmet določene kode kategorije DDV in odstotne stopnje kategorije DDV (če se	/Invoice/M_INVOIC/G_SG52[S_TAX/D_5283='7']/S_MOA[C_C516/D_5025='125']/C_C516/D_5004

Oznaka	Poslovni termin	Opis poslovnega termina	e-SLOG 2.0 XPath
		odstotna stopnja kategorije DDV uporablja).	
BT-117	Znesek davka za kategorijo DDV	Skupni znesek davka za dano kategorijo DDV.	/Invoice/M_INVOIC/G_SG52[S_TAX/D_5283='7']/S_MOA[C_C516/D_5025='124']/C_C516/D_5004
BT-118	Koda kategorije DDV	Identifikacijska koda kategorije DDV.	/Invoice/M_INVOIC/G_SG52[S_TAX/D_5283='7']/S_TAX[C_C241/D_5153='VAT']/D_5305
BT-119	Odstotne stopnja kategorije DDV	Odstotna stopnja DDV, prikazana kot odstotek, ki velja za ustrezno kategorijo DDV.	/Invoice/M_INVOIC/G_SG52[S_TAX/D_5283='7']/S_TAX[C_C241/D_5153='VAT']/C_C243/D_5278
BT-120	Besedilo razloga oprostitve DDV	Besedilna navedba razloga za izvzetje zneska iz obračuna DDV ali zakaj DDV ni zaračunan.	/Invoice/M_INVOIC/S_FTX[D_4451='AGM']/C_C108/D_4440
BT-121	Besedilo razloga oprostitve DDV	Kodirana navedba razloga za oprostitev obveze obračuna DDV.	/Invoice/M_INVOIC/S_FTX[D_4451='AGM']/C_C107/D_4441
BG-25	VRSTICA RAČUNA	Skupina poslovnih izrazov, ki zagotavlja informacije o posameznih vrsticah računa.	
BT-126	Identifikator vrstice računa	Edinstven identifikator za posamezno vrstico v računu.	/Invoice/M_INVOIC/G_SG26/S_LIN/D_1082
BT-127	Opomba vrstice računa	Besedilna izjava, ki podaja nestrukturirano informacijo, ki se nanaša na vrstico računa.	/Invoice/M_INVOIC/G_SG26/S_FTX[D_4451='ACB']/C_C108/D_4440
BT-128	Identifikator predmeta vrstice računa	Identifikator predmeta na katerem temelji vrstica računa po navedbi prodajalca.	/Invoice/M_INVOIC/G_SG26/G_SG30[S_RFF/C_C506/D_1153='AVE']/S_RFF/C_C506/D_1154
BT-128-1	Identifikator identifikacijske sheme identifikatorja vrstice računa	Identifikator identifikacijske sheme identifikatorja predmeta vrstice računa.	/Invoice/M_INVOIC/G_SG26/G_SG30/S_RFF/C_C506/D_1153='AVE'
BT-129	Zaračunana količina	Količina postavk (blaga ali storitev) ki je zaračunana v vrstici računa.	/Invoice/M_INVOIC/G_SG26/S_QTY[C_C186/D_6063='47']/C_C186/D_6060

Oznaka	Poslovni termin	Opis poslovnega termina	e-SLOG 2.0 XPath
BT-130	Enota mere zaračunane količine	Enota mere, ki velja za zaračunano količino.	/Invoice/M_INVOIC/G_SG26/S_QTY[C_C186/D_6063='47']/C_C186/D_6411
BT-131	Neto znesek vrstice računa	Skupni znesek vrstice računa.	/Invoice/M_INVOIC/G_SG26/G_SG27[S_MOA/C_C516/D_5025='203']/S_MOA/C_C516/D_5004
BT-132	Navedba sklica na vrstico nabavnega naročila	Identifikator sklicne vrstice iz nabavnega naloga, ki ga je izstavil kupec.	/Invoice/M_INVOIC/G_SG26/G_SG30[S_RFF/C_C506/D_1153='ON']/S_RFF/C_C506/D_1156
BT-133	Računovodski sklic kupca za vrstico računa	Besedilna vrednost, ki opredeljuje mesto knjiženja ustreznih podatkov v finančnih kontih kupca.	/Invoice/M_INVOIC/G_SG26/G_SG30[S_RFF/C_C506/D_1153='AWQ']/S_RFF/C_C506/D_1154
BG-26	OBDOBJE VRSTICE RAČUNA	Skupina poslovnih izrazov, ki zagotavlja informacije o ustreznem obdobju vrstice računa.	
BT-134	Začetni datum obdobja vrstice računa	Datum, ko se začne obdobje za to vrstico računa.	/Invoice/M_INVOIC/G_SG26/S_DTM[C_C507/D_2005='167']/C_C507/D_2380
BT-135	Končni datum obdobja vrstice računa	Datum, ko se konča obdobje za to vrstico računa.	/Invoice/M_INVOIC/G_SG26/S_DTM[C_C507/D_2005='168']/C_C507/D_2380
BG-27	POPUSTI ZA VRSTICO RAČUNA	Skupina poslovnih izrazov, ki zagotavljajo informacije o popustih, ki se uporabljajo za posamezno vrstico računa.	
BT-136	Znesek popusta vrstice računa	Znesek popusta brez DDV.	/Invoice/M_INVOIC/G_SG26/G_SG39[S_ALC/D_5463='A']/G_SG42[S_MOA/C_C516/D_5025='204']/S_MOA/C_C516/D_5004
BT-137	Znesek osnove za popust vrstice računa	Znesek osnove, ki se lahko uporabi v povezavi z odstotkom popusta vrstice računa za izračun zneska popusta na ravni vrstice računa.	/Invoice/M_INVOIC/G_SG26/G_SG39[S_ALC/D_5463='A']/G_SG42[S_MOA/C_C516/D_5025='25']/S_MOA/C_C516/D_5004
BT-138	Odstotek popusta vrstice računa	Odstotek, ki se lahko uporabi v povezavi z zneskom osnove za popust vrstice računa za izračun zneska popusta vrstice računa.	/Invoice/M_INVOIC/G_SG26/G_SG39[S_ALC/D_5463='A']/G_SG41[S_PCD/C_C501/D_5245='1']/S_PCD/C_C501/D_5482
BT-139	Razlog popusta vrstice računa	Razlog popusta vrstice računa, izražen kot besedilo.	/Invoice/M_INVOIC/G_SG26/G_SG39[S_ALC/D_5463='A']/S_ALC/C_C552/D_1230

Oznaka	Poslovni termin	Opis poslovnega termina	e-SLOG 2.0 XPath
BT-140	Koda razloga popusta vrstice računa	Razlog popusta vrstice računa, izražen kot koda.	/Invoice/M_INVOIC/G_SG26/G_SG39[S_ALC/D_5463='A']/S_ALC/C_C552/D_5189
BG-28	Dajatve vrstice računa	Skupina poslovnih izrazov, ki zagotavljajo informacije o dajatvah in davkih poleg DDV, ki veljajo za posamezno vrstico računa.	
BT-141	Znesek dajatev vrstice računa	Znesek dajatev brez DDV.	/Invoice/M_INVOIC/G_SG26/G_SG39[S_ALC/D_5463='C']/G_SG42[S_MOA/C_C516/D_5025='23']/S_MOA/C_C516/D_5004
BT-142	Znesek osnove za dajatev vrstice računa	Znesek osnove, ki se lahko uporabi v povezavi z odstotkom za dajatve vrstice računa za izračun zneska dajatev vrstice računa.	/Invoice/M_INVOIC/G_SG26/G_SG39[S_ALC/D_5463='C']/G_SG42[S_MOA/C_C516/D_5025='25']/S_MOA/C_C516/D_5004
BT-143	Odstotek dajatev vrstice računa	Odstotek, ki se lahko uporabi v povezavi z zneskom osnove za dajatev vrstice računa za izračun zneska dajatev vrstice računa.	/Invoice/M_INVOIC/G_SG26/G_SG39[S_ALC/D_5463='C']/G_SG41[S_PCD/C_C501/D_5245='2']/S_PCD/C_C501/D_5482
BT-144	Razlog dajatev vrstice računa	Razlog dajatev vrstice računa, izražen kot besedilo.	/Invoice/M_INVOIC/G_SG26/G_SG39[S_ALC/D_5463='C']/S_ALC/C_C552/D_1230
BT-145	Koda razloga dajatev vrstice računa	Razlog dajatev vrstice računa, izražen kot koda.	/Invoice/M_INVOIC/G_SG26/G_SG39[S_ALC/D_5463='C']/S_ALC/C_C552/D_5189
BG-29	PODROBNOSTI CENE	Skupina poslovnih izrazov, ki zagotavljajo informacije o ceni, uporabljeni za blago in storitve, zaračunane v vrstici računa.	
BT-146	Neto cena postavke	Cena postavke brez DDV po odbitku popusta na ceno postavke.	/Invoice/M_INVOIC/G_SG26/G_SG29[S_PRI/C_C509/D_5125='AAA']/S_PRI/C_C509/D_5118
BT-147	Popust na ceno postavke	Skupen popust odštet od bruto cene postavke za izračun neto cene postavke.	/Invoice/M_INVOIC/G_SG26/G_SG39[S_ALC/D_5463='A' and G_SG42/S_MOA/C_C516/D_5025='509']/G_SG42[S_MOA/C_C516/D_5025='509']/S_MOA/C_C516/D_5004
BT-148	Bruto cena postavke	Cena postavke brez DDV po odbitku popusta na ceno postavke.	/Invoice/M_INVOIC/G_SG26/G_SG29[S_PRI/C_C509/D_5125='AAB']/S_PRI/C_C509/D_5118

Oznaka	Poslovni termin	Opis poslovnega termina	e-SLOG 2.0 XPath
BT-149	Količina postavke po izhodiščni ceni	Število enot postavke za katere velja cena.	/Invoice/M_INVOIC/G_SG26/G_SG29[S_PRI/C_C509/D_5125='AAA']/S_PRI/C_C509/D_5284 (net price) /Invoice/M_INVOIC/G_SG26/G_SG29[S_PRI/C_C509/D_5125='AAB']/S_PRI/C_C509/D_5284 (gross price)
BT-150	Koda enote mere količine postavke po izhodiščni ceni	Enota mere, ki velja za zaračunano količino postavke po izhodiščni ceni.	/Invoice/M_INVOIC/G_SG26/G_SG29[S_PRI/C_C509/D_5125='AAA']/S_PRI/C_C509/D_6411 (net price) /Invoice/M_INVOIC/G_SG26/G_SG29[S_PRI/C_C509/D_5125='AAB']/S_PRI/C_C509/D_6411 (gross price)
BG-30	INFORMACIJA O DDV VRSTICE	Skupina poslovnih izrazov, ki zagotavljajo informacije o DDV, uporabljeni za blago in storitve, zaračunane v vrstici računa.	
BT-151	Koda kategorije DDV zaračunane postavke	Koda kategorije DDV za zaračunano postavko.	/Invoice/M_INVOIC/G_SG26/G_SG34/S_TAX/D_5305
BT-152	Stopnja DDV zaračunane postavke	Stopnja DDV, izražena kot odstotek, ki velja za zaračunano postavko.	/Invoice/M_INVOIC/G_SG26/G_SG34[S_TAX/D_5283='7' and S_TAX/C_C241/D_5153='VAT']/S_TAX/C_C243/D_5278
BG-31	INFORMACIJA O POSTAVKI	Skupina poslovnih izrazov, ki zagotavlja informacije o zaračunanem blagu in storitvah.	
BT-153	Naziv postavke	Naziv za postavko.	/Invoice/M_INVOIC/G_SG26/S_IMD[D_7077='F']/C_C273/D_7008
BT-154	Opis postavke	Opis za postavko.	/Invoice/M_INVOIC/G_SG26/S_IMD[D_7077='A']/C_C273/D_7008
BT-155	Prodajalčev identifikator postavke	Od prodajalca določen identifikator za postavko.	/Invoice/M_INVOIC/G_SG26/S_PIA[D_4347='5']/C_C212[D_7143='SA']/D_7140
BT-156	Kupčev identifikator postavke	Od kupca določen identifikator za postavko.	/Invoice/M_INVOIC/G_SG26/S_PIA[D_4347='5']/C_C212[D_7143='IN']/D_7140
BT-157	Identifikator standarda postavke	Identifikator standarda postavke na osnovi registrirane sheme.	/Invoice/M_INVOIC/G_SG26/S_LIN/C_C212/D_7140
BT-157-1	Identifikator identifikacijske sheme identifikatorja standarda postavke	Identifikator identifikacijske sheme identifikatorja standarda postavke.	/Invoice/M_INVOIC/G_SG26/S_LIN/C_C212/D_7143

Oznaka	Poslovni termin	Opis poslovnega termina	e-SLOG 2.0 XPath
BT-158	Identifikator klasifikacije postavke	Koda za klasifikacijo postavke po njenem tipu ali naravi.	/Invoice/M_INVOIC/G_SG26/S_PIA[D_4347='1']/C_C212/D_7140
BT-158-1	Identifikator identifikacijske sheme identifikatorja klasifikacije postavke	Identifikator identifikacijske sheme identifikatorja klasifikacije postavke.	/Invoice/M_INVOIC/G_SG26/S_PIA[D_4347='1']/C_C212/D_7143
BT-158-2	Identifikator različice sheme	Različica identifikacijske sheme.	
BT-159	Država izvora postavke	Identifikacijska koda države izvora postavke.	/Invoice/M_INVOIC/G_SG26/S_ALI/D_3239
BG-32	ZNAČILNOSTI POSTAVKE	Skupina poslovnih izrazov, ki zagotavlja informacije o lastnostih zaračunanega blaga in storitev.	
BT-160	Naziv značilnosti postavke	Naziv značilnosti ali lastnosti postavke.	/Invoice/M_INVOIC/G_SG26/S_FTX[D_4451=‘ACF’]/C_C108/D_4440
BT-161	Vrednost značilnosti postavke	Vrednost značilnosti ali lastnosti postavke.	/Invoice/M_INVOIC/G_SG26/S_FTX[D_4451=‘ACF’]/C_C108/D_4440_2
NBG-01	POSLOVNI TERMINI ZA POTREBE USMERJANJA	NACIONALNA RAZŠIRITEV - Skupina poslovnih terminov za identifikacijo prejemnika in potrebe usmerjanja.	
NBT-010	Identifikator bančnega računa prejmenika-IBAN	Enolični identifikator bančnega računa prejemnika, v primeru, da prejemnik prejema račun preko bančnega omrežja.	/Invoice/M_INVOIC/G_SG2[S_NAD/D_3035='BY']/S_FII[D_3035='BB']/C_C078/D_3194
NBT-011	Naziv imetnika bančnega računa prejemnika	Naziv osebe, ki je imetnik bančnega računa prejemnika, preko katerega se prejemajo računi.	/Invoice/M_INVOIC/G_SG2[S_NAD/D_3035='BY']/S_FII[D_3035='BB']/C_C078/D_3192
NBT-012	Identifikator banke prejemnika-BIC	Identifikator banke, pri kateri je odprt bančni račun prejemnika računa.	/Invoice/M_INVOIC/G_SG2[S_NAD/D_3035='BY']/S_FII[D_3035='BB']/C_C088/D_3433
NBT-013	Davčna številka prejemnika	Davčna številka prejemnika.	/Invoice/M_INVOIC/G_SG2[S_NAD/D_3035='BY']/G_SG3[S_RFF/C_C506/D_1153='AHP']/S_RFF /C_C506/D_1154
NBG-02	DAVČNO POTRJEVANJE	NACIONALNA RAZŠIRITEV - Skupina poslovnih terminov za informacije o davčnem potrjevanju računov.	

Oznaka	Poslovni termin	Opis poslovnega termina	e-SLOG 2.0 XPath
NBT-020	Datum in čas izdaje računa	Datum in čas izdaje računa v sledečem formatu: YYYY-MMDDTHH:MM:SS	/Invoice/M_INVOIC/S_FTX[D_4451='TXD']/C_C108/D_4440
NBT-021	Oznaka fizične osebe (operater)	Oznaka fizične osebe (operater), ki izda račun z uporabo elektronske naprave za izdajo računov.	/Invoice/M_INVOIC/S_FTX[D_4451='TXD']/C_C108/D_4440_1
NBT-022	Enkratna identifikacijska oznaka računa (EOR)	Enkratna identifikacijska oznaka računa (EOR).	/Invoice/M_INVOIC/S_FTX[D_4451='TXD']/C_C108/D_4440_2
NBT-023	Zaščitna oznaka izdajatelja računa (ZOI)	Zaščitna oznaka izdajatelja računa (ZOI).	/Invoice/M_INVOIC/S_FTX[D_4451='TXD']/C_C108/D_4440_3
NBT-024	Oznaka za natisnjeno QR kode, PDF417 kode in kode 128	Oznaka za natisnjeno kodo (60 numeričnih znakov), ki jo sestavlja: ZOI, davčna številka odgovorne osebe, datum in čas izdaje računa in kontrolni znak.	/Invoice/M_INVOIC/S_FTX[D_4451='TXD']/C_C108/D_4440_4
NBG-03	RAZŠIRITVE INFORMACIJ NA POSTAVKAH	NACIONALNA RAZŠIRITEV - Skupina poslovnih terminov z nacionalnimi razširitvami informacij na postavkah računa.	
NBT-031	Znesek z vključenim DDV na postavki	Skupna vrednost postavke z vključenim DDV.	/Invoice/M_INVOIC/G_SG26/G_SG27[S_MOA/C_C516/D_5025='38']/S_MOA/C_C516/D_5004
NBT-032	Znesek obdavčljive osnove za kategorijo DDV na postavki	Znesek obdavčljive osnove za kategorijo DDV na postavki.	/Invoice/M_INVOIC/G_SG26/G_SG27[S_MOA/C_C516/D_5025='125']/S_MOA/C_C516/D_5004
NBT-033	Znesek davka za kategorijo DDV na postavki	Znesek davka za kategorijo DDV na postavki.	/Invoice/M_INVOIC/G_SG26/G_SG27[S_MOA/C_C516/D_5025='124']/S_MOA/C_C516/D_5004

Dodatek B
(informativni)

Shema e-SLOG 2.0

B.1 Shema .XML

Aktualna shema .XML dokumenta e-SLOG 2.0 je dostopna na povezavi:

http://www.roseslovenia.eu/e_files/news/eSLOG20_INVOIC_v200.xsd.

Dodatek C
(informativni)

Demonstracijski primer uporabe

C.1 Primer uporabe elementov segmenta

V poglavju 6 je pri posameznih elementih segmenta naveden primer uporabe. Demonstracijski primer dokumenta e-SLOG 2.0, ki vsebuje vse navedene primere za elemente, je dostopen na povezavi:

http://www.roseslovenia.eu/e_files/news/sample_eSLOG20_INVOIC_v200.xml.

Dodatek D
(informativni)

Mapirna tabela e-SLOG 1.6

D.1 Mapirna tabela med standardom e-SLOG 1.6 in e-SLOG 2.0

Interoperabilnost med standardom e-SLOG 1.6 in e-SLOG 2.0 je podprta z mapirnimi tabelami, ki prevajajo elemente med obema standardoma.

Mapirna tabela za prevajanje iz dokumenta e-SLOG 1.6 v e-SLOG 2.0 je dostopna na povezavi:

http://www.roseslovenia.eu/e_files/news/map_eSLOG16_eSLOG20.xlsx.

Mapirna tabela za prevajanje iz dokumenta e-SLOG 2.0 v e-SLOG 1.6 je dostopna na povezavi:

http://www.roseslovenia.eu/e_files/news/map_eSLOG20_eSLOG16.xlsx.

Literatura

[1] Direktiva 2014/55/EU Evropskega parlamenta in sveta z dne 16. aprila 2014 o izdajanju elektronskih računov pri javnem naročanju. Razpoložljivo na http://eurlex. europa.eu/legal-content/EN/TXT/?uri=CELEX:32014L0055.

[2] SIST EN 16931-1:2017, *Elektronsko izdajanje računov – 1. del: Semantični podatkovni model ključnih elementov za elektronski račun.*

[3] SIST-TS CEN/TS 16931-2:2017, *Elektronsko izdajanje računov – 2. del: Seznam sintaks v skladu z EN 16931-1.*

[4] SIST-TS CEN/TS 16931-3-4:2018, *Elektronsko izdajanje računov – 3–4. del: Sintaksa povezav v skladu z UN/EDIFACT INVOIC D16B.*

[5] EDIFACT INVOIC D01B.

[6] ISO/TS 20625:2002, *Electronic data interchange for administration, commerce and transport (EDIFACT) – Rules for generation of XML scheme files (XSD) on the basis of EDI(FACT) implementation guidelines.*

[7] W3C XML shema. Razpoložljivo na https://www.w3.org/TR/xmldsig-core/xmldsig-core-schema.xsd.