Gospodarska zbornica Slovenije

Chamber of Commerce and Industry of Slovenia

e-SLOG 2.0

Electronic invoice

February 2019

English version

e-SLOG 2.0 Electronic Invoice – Part 2: Document Composition

READINESS OF SLOVENIAN E-INVOICING ROSE

Co-financed by the European Union
Connecting Europe Facility

Rights and contacts

e-SLOG is a trademark of the Chamber of Commerce and Industry of Slovenia. e-SLOG 2.0 Electronic Invoice documentation was prepared by the ROSE "Readiness Of Slovenian E-Invoicing" Action no 2016-SI-IA-0103, which is co-financed by the European Union's Connecting Europe Facility (CEF). The documentation was implemented as milestone no. 2 "Manual for eSLOG 2.0 ready" of Activity 1 " Upgrade of the Slovenian national eInvoicing standard eSlog 1.6 to 2.0". The sole responsibility of this publication lies with the author. The European Union is not responsible for any use that may be made of the information contained therein. e-SLOG 2.0 Electronic Invoice documentation is published at http://www.roseslovenia.eu/.

Users are permitted to use all the published materials for the purposes of electronic commerce. Their use is free of charge. Editing the contents of the schemas is not permitted.

The Chamber of Commerce and Industry of Slovenia and the partners who participated in the ROSE project for the preparation of e-SLOG 2.0 standard shall not assume any direct or indirect liability for any damage caused by the use of the e-SLOG 2.0 standard.

Members of the working group for the preparation of e-SLOG 2.0 Electronic Invoice Documentation:

Dušan Zupančič (CCIS), Alan Ružič (ZZI), Rok Bojanc (ZZI), Tomaž Močnik (ZZI), Jorgo Bertalanič (PPA), Rok Bojkovič (Mojdenar IT).

Contact addresses:

Chamber of Commerce and Industry of Slovenia
Dimičeva 13
1504 Ljubljana
Telephone no.: +386 (0)1 58 98 000
E-mail: epp@gzs.si
Website: https://e-slog.gzs.si

ZZI, d. o. o.
Pot k sejmišču 33
1231 Ljubljana Črnuče
Telephone no.: +386 (0)1 53 03 300
E-mail: info@zzi.si
Website: https://www.zzi.si

Public Payment Administration of the Republic of Slovenia
Dunajska cesta 48
1000 Ljubljana
Telephone no.: +386 (0)1 47 51 651
E-mail: ujp@ujp.gov.si
Website: http://www.ujp.gov.si

Mojdenar IT, d. o. o.
Vurnikova ulica 2
1000 Ljubljana
Telephone no.: +386 (0)1 43 02 210
E-mail: info@mojdenar.com
Website: http://www.mojdenar.si

Table of Contents

Foreword 4
Introduction 5
1 Scope 6
2 Normative references 6
3 Terms and definitions 6
4 Message structure chart 6
5 Branching diagram 12
6 Segment details 29
7 Consolidated invoice 186
7.1 The delivery and order data at the level of the invoice header 186
7.2 The delivery and order data at the level of the invoice line item 189
Annex A (informative) Business terms (BT) 191
A.1 List and description of business terms (BT) and business terms groups (BG) 191
Annex B (informative) e-SLOG 2.0 Schema 210
B.1 XML Schema 210
Annex C (informative) Demonstration example of use application 211
C.1 An example of using segment elements 211
Annex D (informative) Mapping table e-SLOG 1.6 212
D.1 Mapping table between e-SLOG 1.6 and e-SLOG 2.0 212
Literature 213

Foreword

The e-SLOG 2.0 Electronic Invoice documentation was prepared by the ROSE "Readiness Of Slovenian E-Invoicing" project.

This document is part of a group of documents, consisting of:

- e-SLOG 2.0 Electronic Invoice – Part 1: General Instructions
- e-SLOG 2.0 Electronic Invoice – Part 2: Document Composition
- e-SLOG 2.0 Electronic Invoice – Part 3: Examples of Use

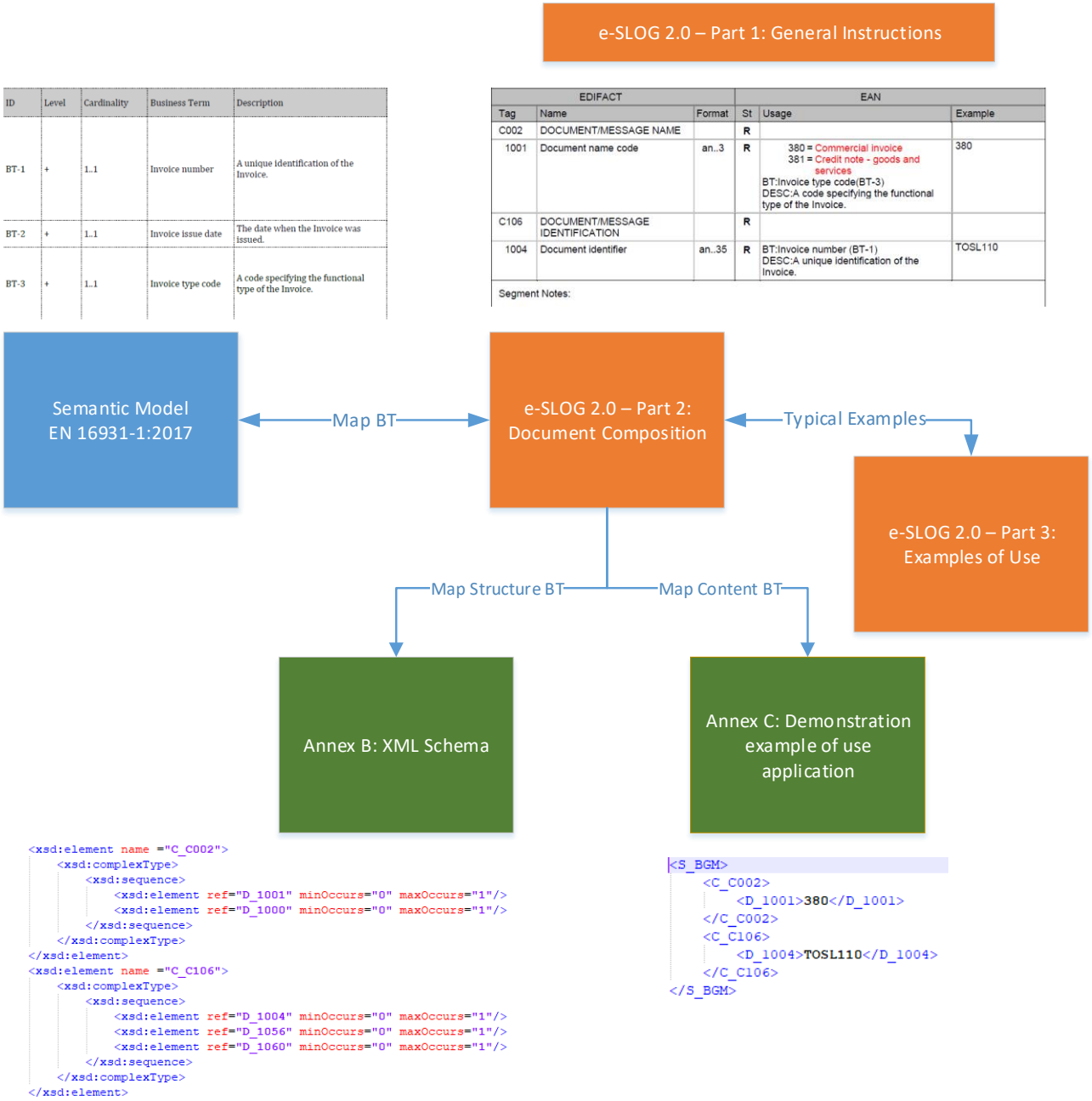

Figure 1: Link between the e-SLOG 2.0 electronic invoice documents

Introduction

On 6 May 2014, the European Parliament and the Council adopted Directive 2014/55/EU on establishing the EN 16931 electronic invoicing standard. The European standard was published in the Official Journal of the European Union on 17 October 2017.

The ROSE "Readiness Of Slovenian E-invoicing" measure was established in order to introduce the European electronic invoicing standard in the Slovenian public sector and in the economy. One of the fundamental objectives of the measure is to upgrade the e-SLOG standard to the 2.0 version, which is in line with the European standard. In the preparation of the e-SLOG 2.0 standard, UN/EDIFACT INVOIC syntax was used as a basis, the same as in the preparation of the previous e-SLOG standard versions.

Interoperability between the old e-SLOG 1.6 standard and the new e-SLOG 2.0 standard is provided by mapping tables, which enable mapping between the two standards. The mapping tables can be found in Annex D to the document *e-SLOG 2.0 Electronic Invoice – Part 2: Document Composition*.

The e-SLOG 2.0 October 2018 version contains the national extensions. National extensions were prepared by the e-SLOG working group at the Chamber of Commerce and Industry of Slovenia.

1 Scope

The purpose of the document is to provide composition of the document e-SLOG 2.0 – Electronic invoice and the connection of individual segments of the document with a semantic model described in SIST EN 16931-1:2017 [2]. It is intended for all legal and public persons implementing e-SLOG 2.0 0 – Electronic invoice into their software solutions.

2 Normative references

The following documents, in whole or in part, are normatively referenced in this document and are indispensable for its application. For dated references, only the edition cited applies. For undated references, the latest edition of the referenced document (including any amendments) applies.

SIST EN 16931-1:2017 Electronic Invoicing – Part 1: Semantic data model of the core elements of an electronic invoice.

3 Terms and definitions

For the purposes of this document, the terms and definitions from *e-SLOG 2.0 Electronic Invoice – Part 1: General Instructions* shall apply.

Annex A contains a list and description of business terms.

4 Message structure chart

The message is composed by segments. The structure of the message is explained in *e-SLOG 2.0 Electronic Invoice - Part 1: General Instructions*, Chapter 8.3.1. Each segment is defined by segment code, serial number in documentation, obligation to enter segment[1], number of repetitions, segment name, and relationship with other segments.

UNH	1	M	1	- Message header
BGM	2	M	1	- Beginning of message
DTM	3	M	1	- Date/time/period
DTM	4	C	1	- Date/time/period
DTM	5	C	1	- Date/time/period
DTM	6	C	1	- Date/time/period
DTM	7	C	1	- Date/time/period
DTM	8	C	1	- Date/time/period
FTX	9	C	1	- Free text
FTX	10	C	1	- Free text
FTX	11	C	99	- Free text
FTX	12	M	1	- Free text
FTX	13	C	1	- Free text
FTX	14	C	1	- Free text
FTX	15	C	1	- Free text
FTX	16	C	1	- Free text
FTX	17	C	1	- Free text
FTX	18	C	1	- Free text
┌──SG1		C	1	- RFF

[1] Obligation to enter segment is defined in the document *e-SLOG 2.0 Electronic Invoice – Part 1: General Instructions, Chapter 7.2.*

RFF	19	M	1	- Reference
SG1		C	1	- RFF
RFF	20	M	1	- Reference
SG1		C	1	- RFF
RFF	21	M	1	- Reference
SG1		C	1	- RFF
RFF	22	M	1	- Reference
SG1		C	1	- RFF
RFF	23	M	1	- Reference
SG1		C	1	- RFF
RFF	24	M	1	- Reference
SG1		C	1	- RFF
RFF	25	M	1	- Reference
SG1		C	1	- RFF
RFF	26	M	1	- Reference
SG1		C	99999	- RFF-DTM
RFF	27	M	1	- Reference
DTM	28	C	1	- Date/time/period
SG1		C	1	- RFF
RFF	29	M	1	- Reference
SG2		R	1	- NAD-FII-FII-FII-SG3-SG3-SG3-SG3-SG3-SG3-SG3-SG5-SG5
NAD	30	M	1	- Name and address
FII	31	C	1	- Financial institution information
FII	32	C	1	- Financial institution information
FII	33	C	1	- Financial institution information
SG3		C	1	- RFF
RFF	34	M	1	- Reference
SG3		C	1	- RFF
RFF	35	M	1	- Reference
SG3		C	1	- RFF
RFF	36	M	1	- Reference
SG3		C	1	- RFF
RFF	37	M	1	- Reference
SG3		R	1	- RFF
RFF	38	M	1	- Reference
SG3		C	1	- RFF
RFF	39	M	1	- Reference
SG3		C	1	- RFF
RFF	40	M	1	- Reference
SG5		C	1	- CTA-COM
CTA	41	M	1	- Contact information
COM	42	C	1	- Communication contact
SG5		C	1	- CTA-COM-COM
CTA	43	M	1	- Contact information
COM	44	C	1	- Communication contact
COM	45	C	1	- Communication contact
SG2		R	1	- NAD-FII-SG3-SG3-SG3-SG5-SG5
NAD	46	M	1	- Name and address
FII	47	C	1	- Financial institution information
SG3		C	1	- RFF
RFF	48	M	1	- Reference
SG3		C	1	- RFF
RFF	49	M	1	- Reference
SG3		R	1	- RFF
RFF	50	M	1	- Reference

SG5		C	1	- CTA-COM
CTA	51	M	1	- Contact information
COM	52	C	5	- Communication contact
SG5		C	1	- CTA-COM-COM
CTA	53	M	1	- Contact information
COM	54	C	1	- Communication contact
COM	55	C	1	- Communication contact
SG2		C	1	- NAD-SG3
NAD	56	M	1	- Name and address
SG3		C	1	- RFF
RFF	57	M	1	- Reference
SG2		C	1	- NAD
NAD	58	M	1	- Name and address
SG2		C	1	- NAD-SG3
NAD	59	M	1	- Name and address
SG3		R	1	- RFF
RFF	60	M	1	- Reference
SG7		R	1	- CUX
CUX	61	M	1	- Currencies
SG7		C	1	- CUX
CUX	62	M	1	- Currencies
SG8		C	1	- PAT-DTM-PAI
PAT	63	M	1	- Payment terms basis
DTM	64	C	1	- Date/time/period
PAI	65	R	1	- Payment instructions
SG16		C	9999	- ALC-SG19-SG20-SG20-SG22
ALC	66	M	1	- Allowance or charge
SG19		C	1	- PCD
PCD	67	M	1	- Percentage details
SG20		R	1	- MOA
MOA	68	M	1	- Monetary amount
SG20		C	1	- MOA
MOA	69	M	1	- Monetary amount
SG22		C	1	- TAX
TAX	70	M	1	- Duty/tax/fee details
SG16		C	9999	- ALC-SG19-SG20-SG20-SG22
ALC	71	M	1	- Allowance or charge
SG19		C	1	- PCD
PCD	72	M	1	- Percentage details
SG20		R	1	- MOA
MOA	73	M	1	- Monetary amount
SG20		C	1	- MOA
MOA	74	M	1	- Monetary amount
SG22		C	5	- TAX
TAX	75	M	1	- Duty/tax/fee details
SG26		R	999999	- LIN-PIA-PIA-PIA-IMD-IMD-QTY-ALI-DTM-DTM-FTX-FTX-SG27-SG27-SG29-SG29-SG30-SG30-SG30-SG34-SG39-SG39-SG39
LIN	76	M	1	- Line item
PIA	77	C	1	- Additional product id
PIA	78	C	1	- Additional product id
PIA	79	C	25	- Additional product id
IMD	80	R	1	- Item description
IMD	81	C	1	- Item description
QTY	82	R	1	- Quantity

ALI	83	C	1	- Additional information
DTM	84	C	1	- Date/time/period
DTM	85	C	1	- Date/time/period
FTX	86	C	1	- Free text
FTX	87	C	99	- Free text
SG27		R	1	- MOA
MOA	88	M	1	- Monetary amount
SG27		C	1	- MOA
MOA	89	M	1	- Monetary amount
SG29		R	1	- PRI
PRI	90	M	1	- Price details
SG29		C	1	- PRI
PRI	91	M	1	- Price details
SG30		C	1	- RFF
RFF	92	M	1	- Reference
SG30		C	1	- RFF
RFF	93	M	1	- Reference
SG30		C	1	- RFF
RFF	94	M	1	- Reference
SG34		R	1	- TAX-MOA-MOA
TAX	95	M	1	- Duty/tax/fee details
MOA	96	C	2	- Monetary amount
MOA	97	C	2	- Monetary amount
SG39		C	30	- ALC-SG41-SG42-SG42
ALC	98	M	1	- Allowance or charge
SG41		C	1	- PCD
PCD	99	M	1	- Percentage details
SG42		R	2	- MOA
MOA	100	M	1	- Monetary amount
SG42		C	2	- MOA
MOA	101	M	1	- Monetary amount
SG39		C	30	- ALC-SG42
ALC	102	M	1	- Allowance or charge
SG42		C	1	- MOA
MOA	103	M	1	- Monetary amount
SG39		C	30	- ALC-SG41-SG42-SG42
ALC	104	M	1	- Allowance or charge
SG41		C	1	- PCD
PCD	105	M	1	- Percentage details
SG42		R	2	- MOA
MOA	106	M	1	- Monetary amount
SG42		C	2	- MOA
MOA	107	M	1	- Monetary amount
SG26		C	999999	- LIN-PIA-IMD-IMD-QTY-ALI-DTM-DTM-FTX-SG27-SG27-SG29-SG30-SG30-SG30-SG34
LIN	108	M	1	- Line item
PIA	109	C	1	- Additional product id
IMD	110	R	1	- Item description
IMD	111	C	1	- Item description
QTY	112	R	1	- Quantity
ALI	113	C	1	- Additional information
DTM	114	C	1	- Date/time/period
DTM	115	C	1	- Date/time/period
FTX	116	C	1	- Free text
SG27		R	1	- MOA

MOA	117	M	1	- Monetary amount
SG27		R	1	- MOA
MOA	118	M	1	- Monetary amount
SG29		R	1	- PRI
PRI	119	M	1	- Price details
SG30		C	1	- RFF
RFF	120	M	1	- Reference
SG30		C	1	- RFF
RFF	121	M	1	- Reference
SG30		C	1	- RFF
RFF	122	M	1	- Reference
SG34		R	1	- TAX-MOA-MOA
TAX	123	M	1	- Duty/tax/fee details
MOA	124	C	2	- Monetary amount
MOA	125	C	2	- Monetary amount
SG26		C	999999	- LIN-PIA-IMD-QTY-SG27-SG27-SG29-SG34
LIN	126	M	1	- Line item
PIA	127	C	1	- Additional product id
IMD	128	R	1	- Item description
QTY	129	R	1	- Quantity
SG27		R	99	- MOA
MOA	130	M	1	- Monetary amount
SG27		R	1	- MOA
MOA	131	M	1	- Monetary amount
SG29		R	1	- PRI
PRI	132	M	1	- Price details
SG34		R	1	- TAX-MOA-MOA
TAX	133	M	1	- Duty/tax/fee details
MOA	134	C	2	- Monetary amount
MOA	135	C	2	- Monetary amount
UNS	136	C	1	- Section control
SG50		M	1	- MOA
MOA	137	M	1	- Monetary amount
SG50		M	1	- MOA
MOA	138	M	1	- Monetary amount
SG50		M	1	- MOA
MOA	139	M	1	- Monetary amount
SG50		M	1	- MOA
MOA	140	M	1	- Monetary amount
SG50		C	1	- MOA
MOA	141	M	1	- Monetary amount
SG50		C	1	- MOA
MOA	142	M	1	- Monetary amount
SG50		C	1	- MOA
MOA	143	M	1	- Monetary amount
SG50		C	1	- MOA
MOA	144	M	1	- Monetary amount
SG50		C	1	- MOA
MOA	145	M	1	- Monetary amount
SG50		C	1	- MOA
MOA	146	M	1	- Monetary amount
SG52		R	10	- TAX-MOA-MOA
TAX	147	M	1	- Duty/tax/fee details
MOA	148	R	1	- Monetary amount
MOA	149	R	1	- Monetary amount

SG52		R	10	- TAX-MOA-MOA
TAX	150	M	1	- Duty/tax/fee details
MOA	151	R	1	- Monetary amount
MOA	152	R	1	- Monetary amount
UNT	153	C	1	- Message trailer

5 Branching diagram

Branching diagram presents the hierarchical structure of segments. Displayed information is described in the document *e-SLOG 2.0 Electronic Invoice – Part 1: General Instructions,* Chapter 8.3.2.

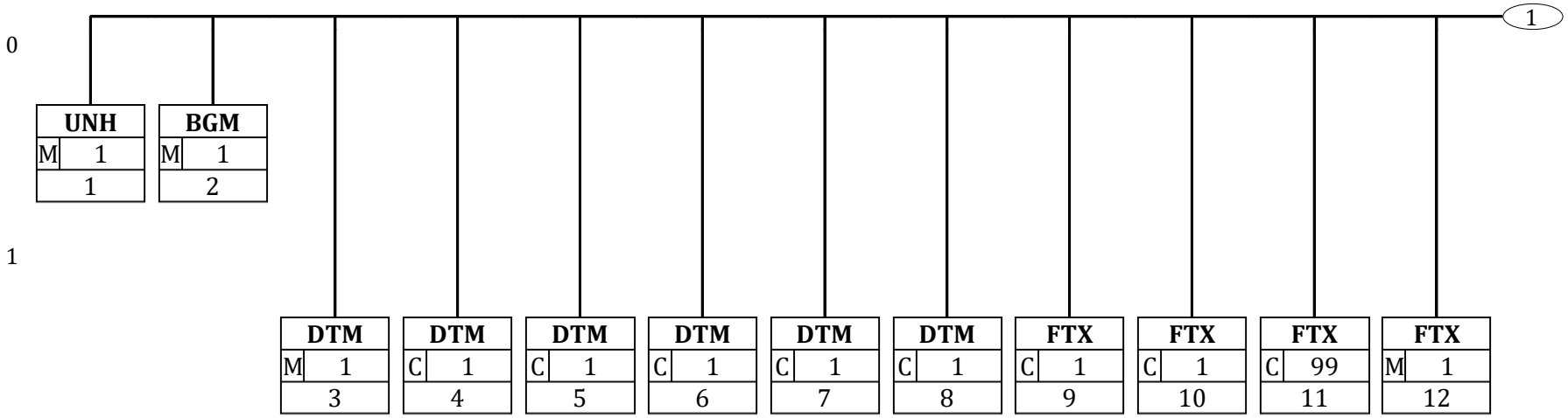

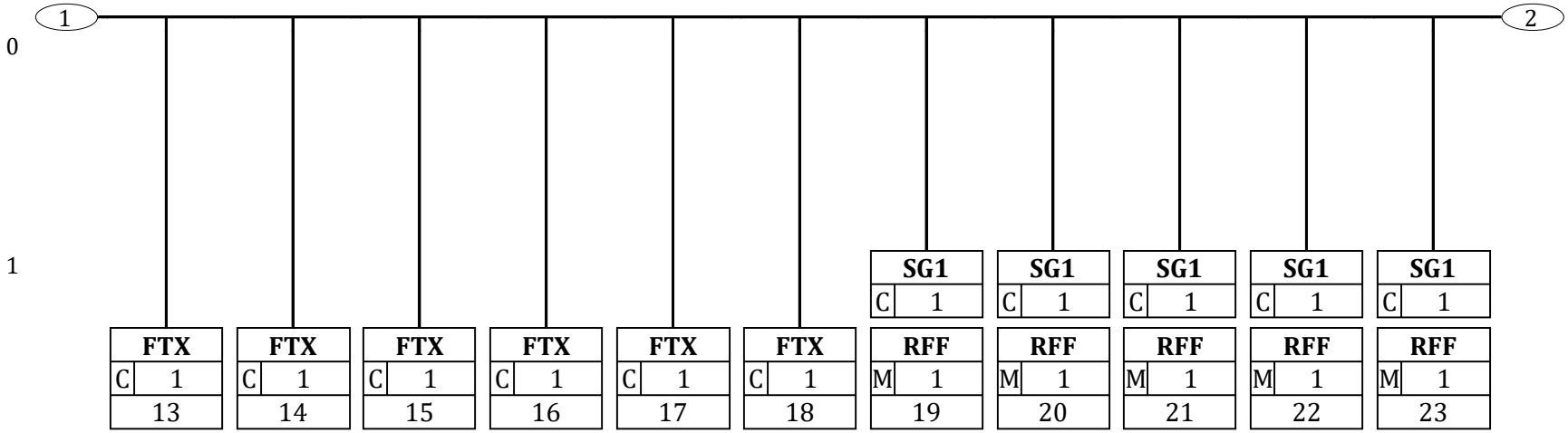
1
2
0
1
FTX C 1 13
FTX C 1 14
FTX C 1 15
FTX C 1 16
FTX C 1 17
FTX C 1 18
SG1 C 1
RFF M 1 19
SG1 C 1
RFF M 1 20
SG1 C 1
RFF M 1 21
SG1 C 1
RFF M 1 22
SG1 C 1
RFF M 1 23

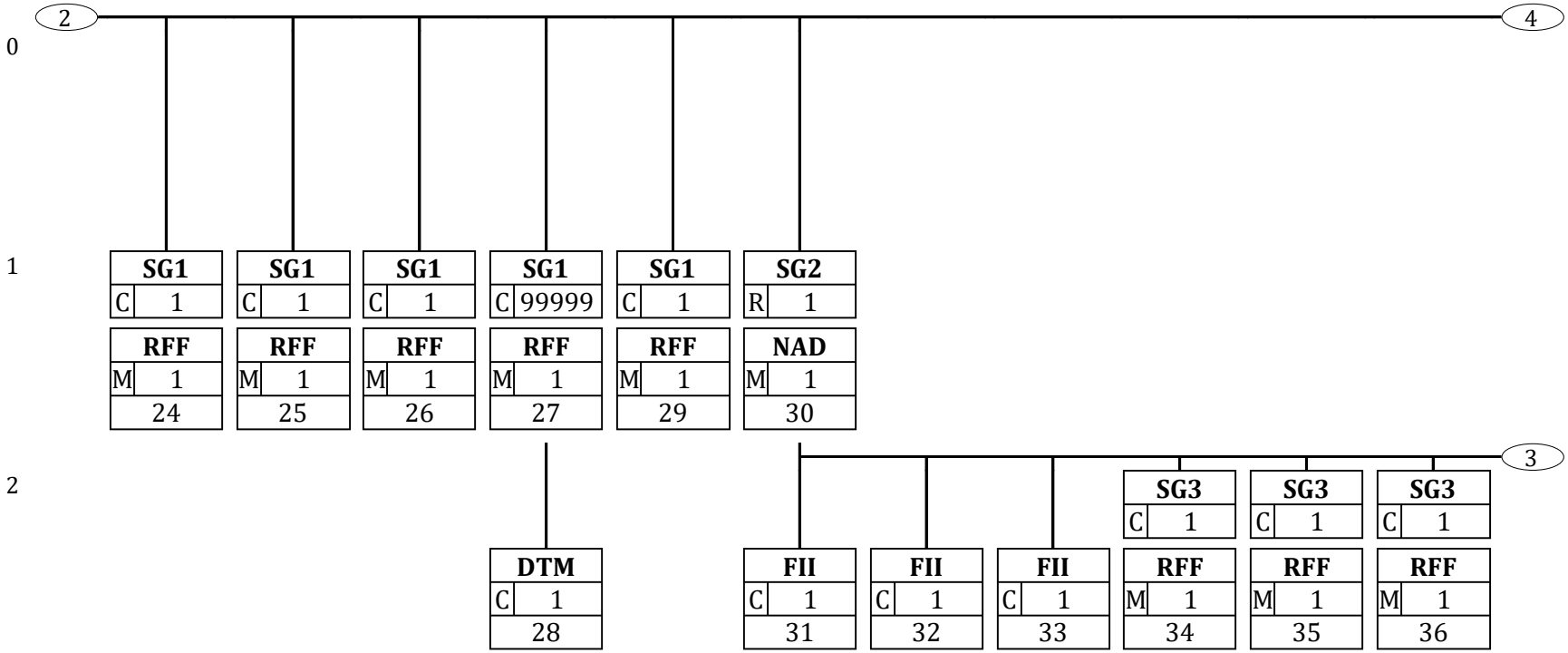
2
4
0
1
2
3
SG1 C 1
SG1 C 1
SG1 C 1
SG1 C 99999
SG1 C 1
SG2 R 1
RFF M 1 24
RFF M 1 25
RFF M 1 26
RFF M 1 27
RFF M 1 29
NAD M 1 30
DTM C 1 28
FII C 1 31
FII C 1 32
FII C 1 33
SG3 C 1
SG3 C 1
SG3 C 1
RFF M 1 34
RFF M 1 35
RFF M 1 36

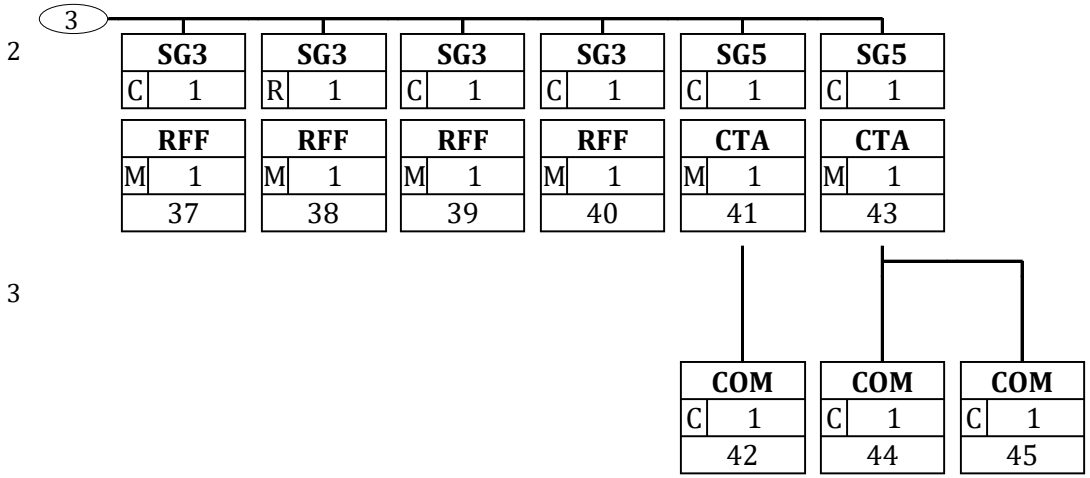
3
2
SG3 C 1
SG3 R 1
SG3 C 1
SG3 C 1
SG5 C 1
SG5 C 1
RFF M 1 37
RFF M 1 38
RFF M 1 39
RFF M 1 40
CTA M 1 41
CTA M 1 43
3
COM C 1 42
COM C 1 44
COM C 1 45

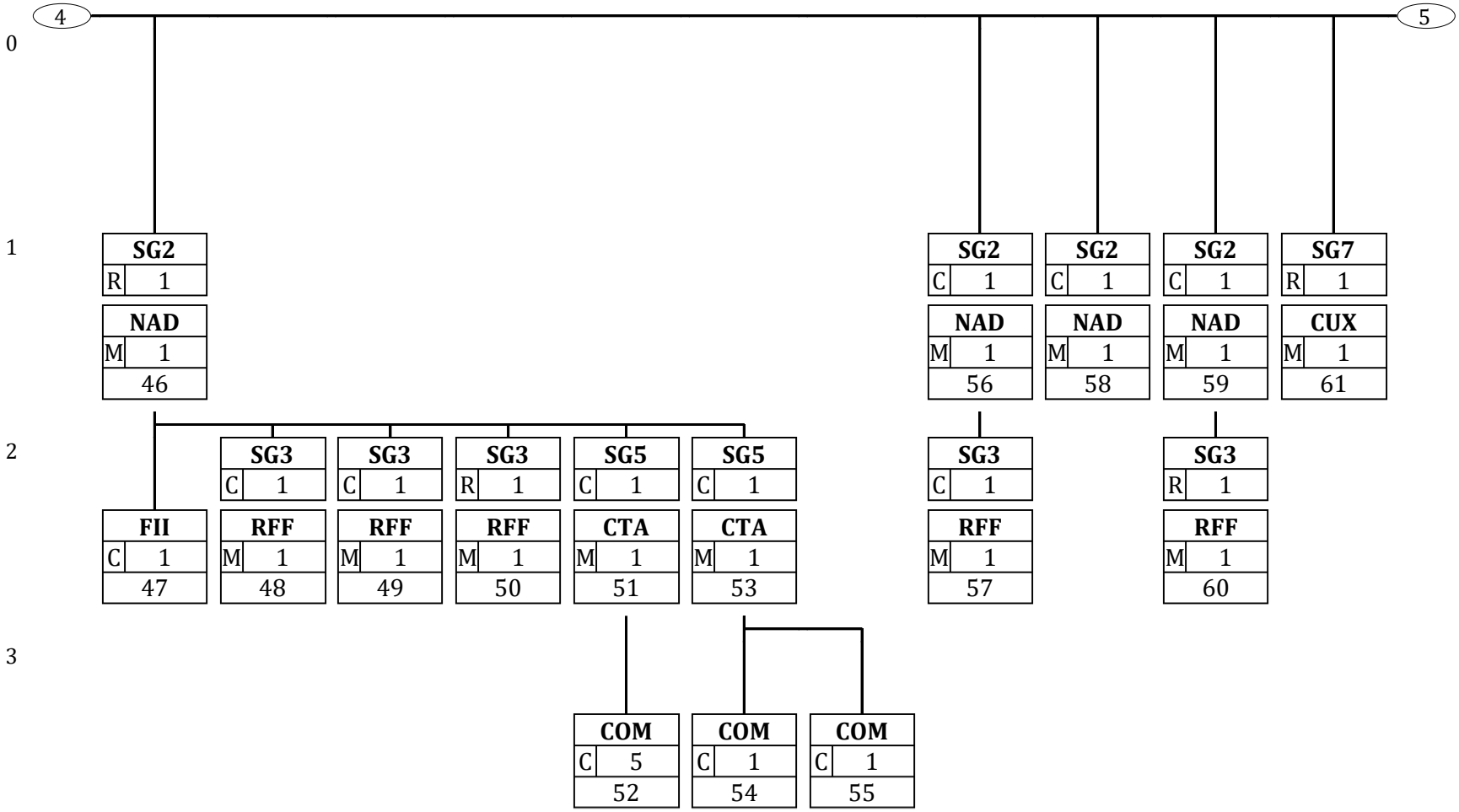
4
5
0
1
2
3
SG2 R 1
NAD M 1 46
FII C 1 47
SG3 C 1
RFF M 1 48
SG3 C 1
RFF M 1 49
SG3 R 1
RFF M 1 50
SG5 C 1
CTA M 1 51
COM C 5 52
SG5 C 1
CTA M 1 53
COM C 1 54
COM C 1 55
SG2 C 1
NAD M 1 56
SG3 C 1
RFF M 1 57
SG2 C 1
NAD M 1 58
SG2 C 1
NAD M 1 59
SG3 R 1
RFF M 1 60
SG7 R 1
CUX M 1 61

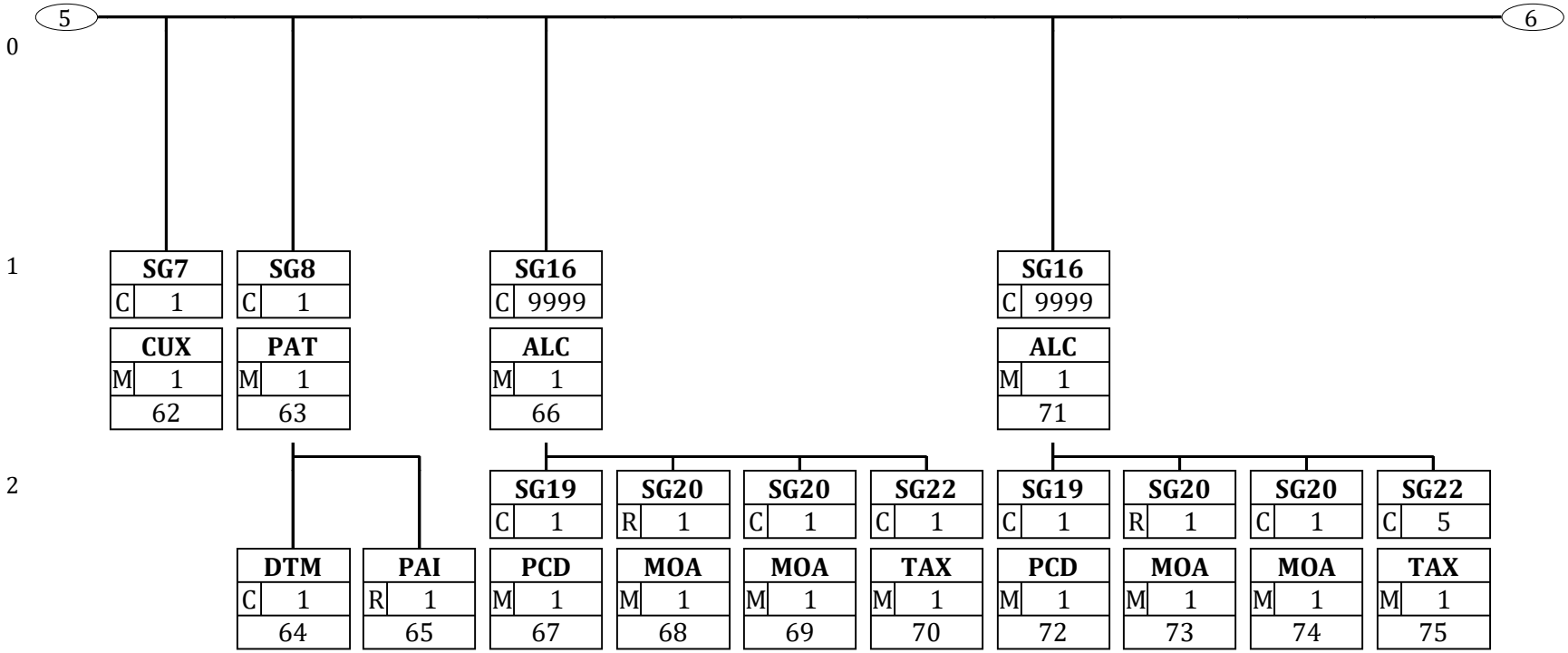
5
6
0
1
2
SG7 C 1
CUX M 1 62
SG8 C 1
PAT M 1 63
DTM C 1 64
PAI R 1 65
SG16 C 9999
ALC M 1 66
SG19 C 1
PCD M 1 67
SG20 R 1
MOA M 1 68
SG20 C 1
MOA M 1 69
SG22 C 1
TAX M 1 70
SG16 C 9999
ALC M 1 71
SG19 C 1
PCD M 1 72
SG20 R 1
MOA M 1 73
SG20 C 1
MOA M 1 74
SG22 C 5
TAX M 1 75

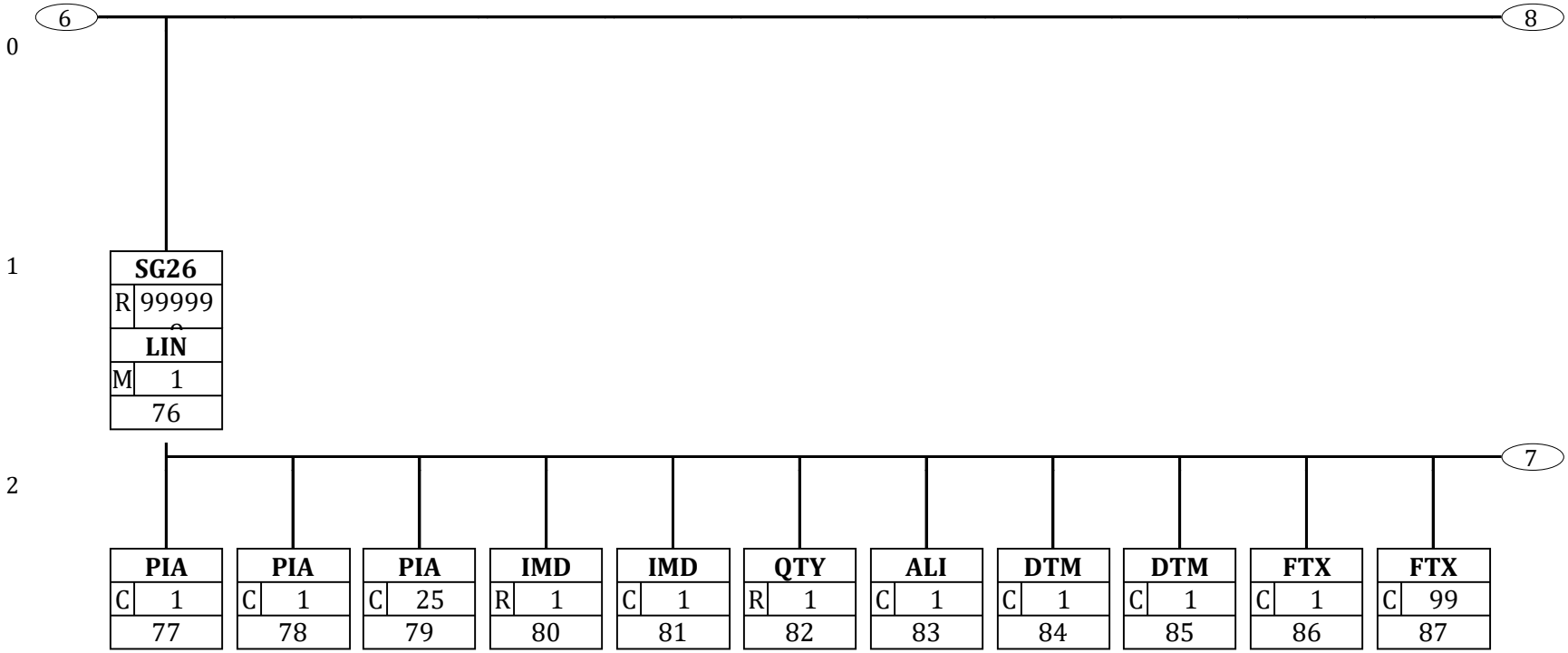
6
8
0
1
SG26
R 99999
LIN
M 1
76
7
2
PIA C 1 77
PIA C 1 78
PIA C 25 79
IMD R 1 80
IMD C 1 81
QTY R 1 82
ALI C 1 83
DTM C 1 84
DTM C 1 85
FTX C 1 86
FTX C 99 87

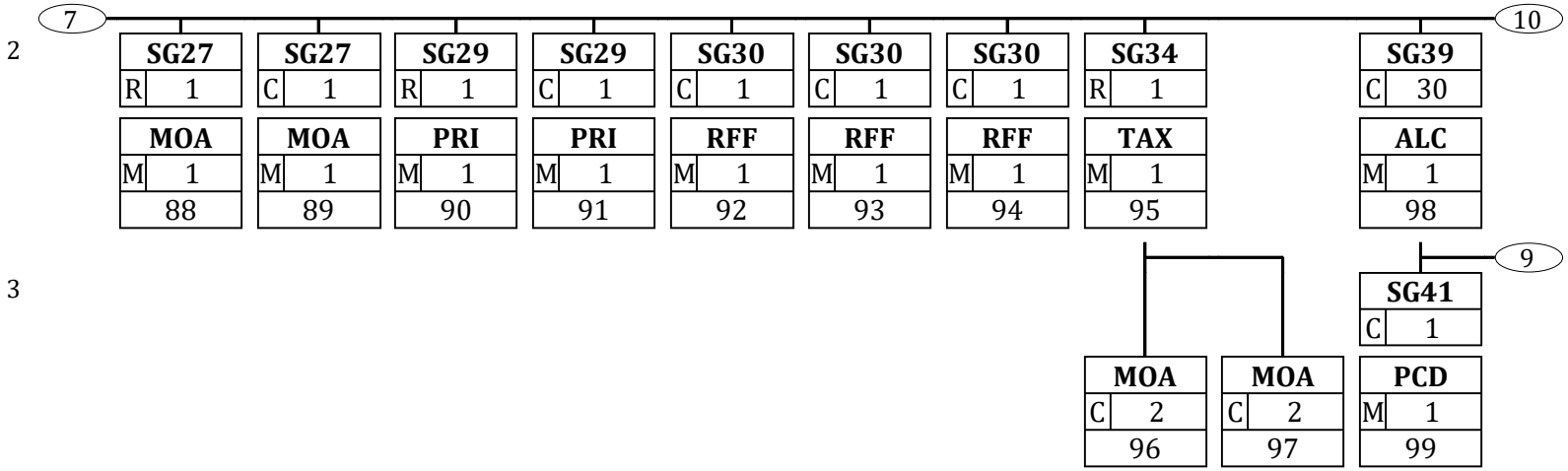
7
10
2
SG27 R 1
MOA M 1 88
SG27 C 1
MOA M 1 89
SG29 R 1
PRI M 1 90
SG29 C 1
PRI M 1 91
SG30 C 1
RFF M 1 92
SG30 C 1
RFF M 1 93
SG30 C 1
RFF M 1 94
SG34 R 1
TAX M 1 95
MOA C 2 96
MOA C 2 97
SG39 C 30
ALC M 1 98
9
3
SG41 C 1
PCD M 1 99

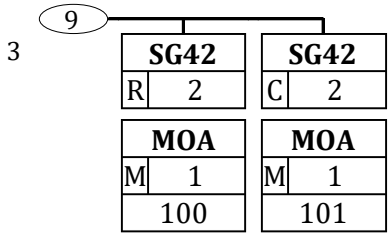
3
9
SG42
R 2
SG42
C 2
MOA
M 1
100
MOA
M 1
101

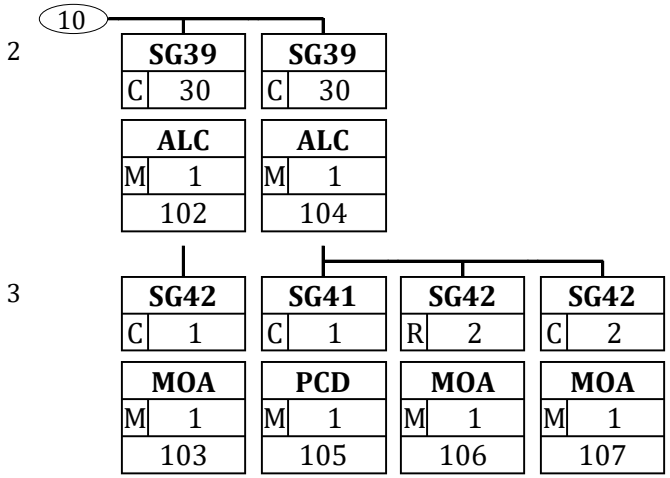
10
2
SG39
C 30
SG39
C 30
ALC
M 1
102
ALC
M 1
104
3
SG42
C 1
SG41
C 1
SG42
R 2
SG42
C 2
MOA
M 1
103
PCD
M 1
105
MOA
M 1
106
MOA
M 1
107

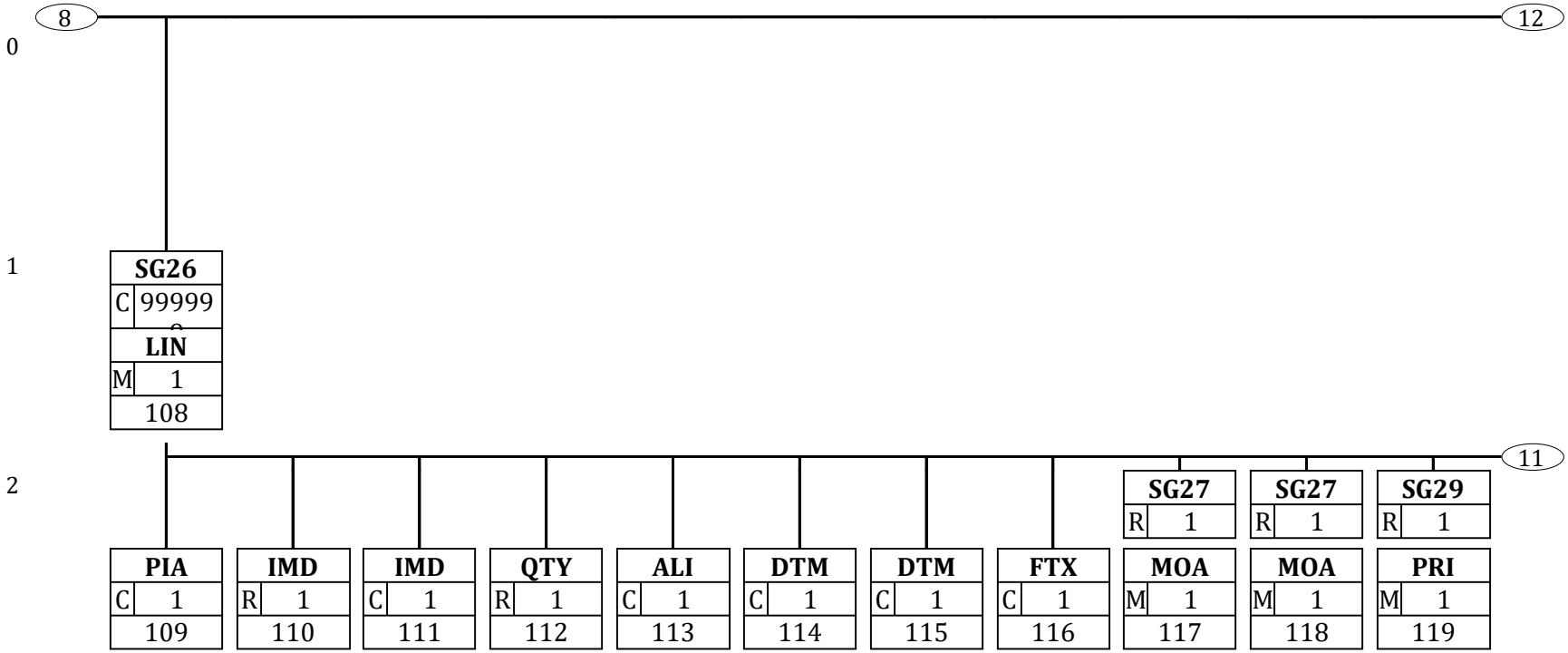
8
12
0
1
SG26
C 99999
LIN
M 1
108
2
11
PIA
C 1
109
IMD
R 1
110
IMD
C 1
111
QTY
R 1
112
ALI
C 1
113
DTM
C 1
114
DTM
C 1
115
FTX
C 1
116
SG27
R 1
MOA
M 1
117
SG27
R 1
MOA
M 1
118
SG29
R 1
PRI
M 1
119

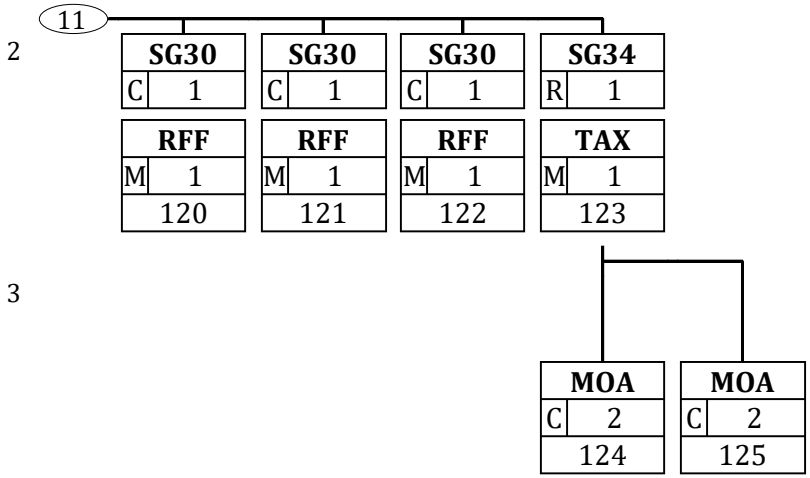
11
2
SG30
C 1
SG30
C 1
SG30
C 1
SG34
R 1
RFF
M 1
120
RFF
M 1
121
RFF
M 1
122
TAX
M 1
123
3
MOA
C 2
124
MOA
C 2
125

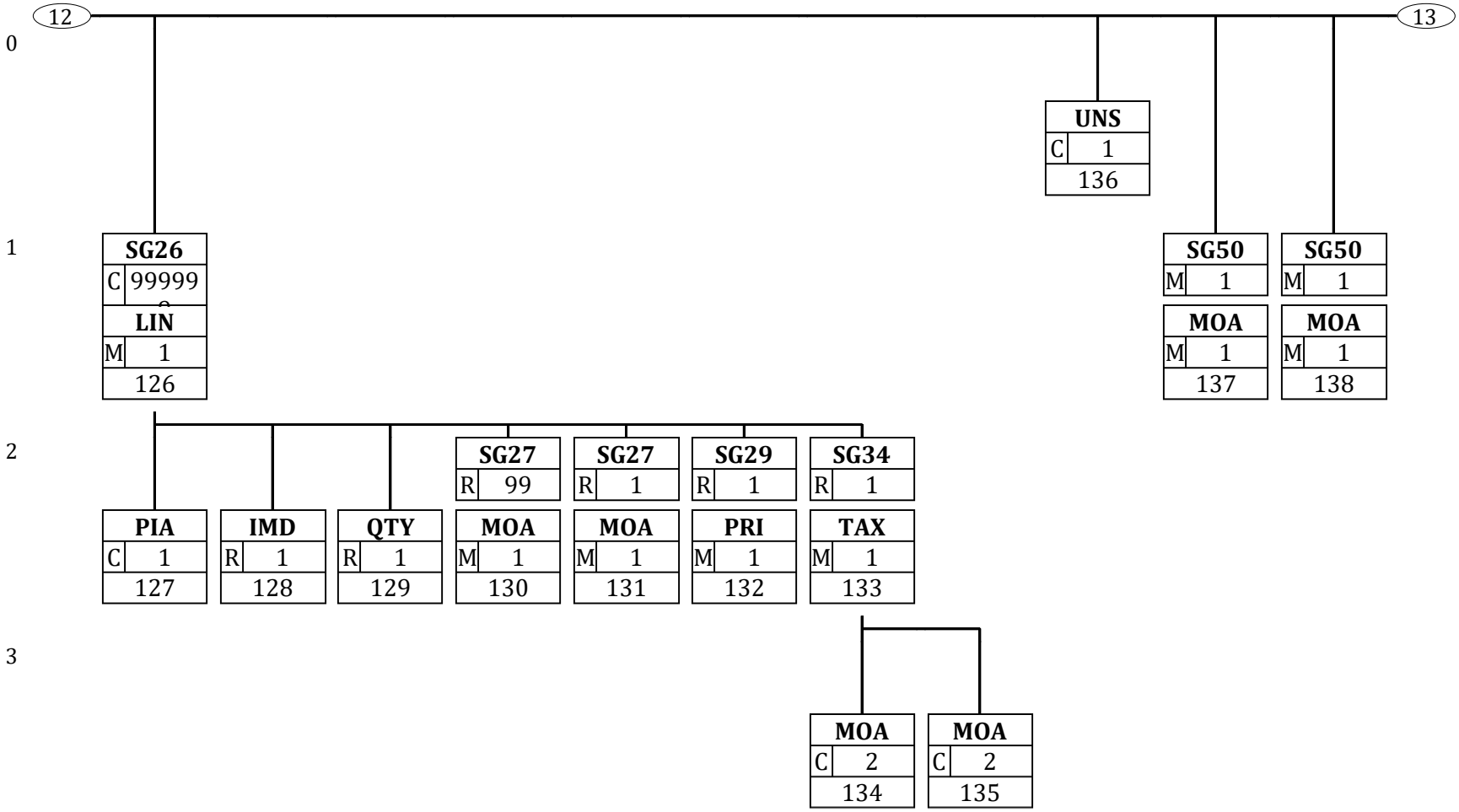
12
13
0
1
2
3
UNS
C 1
136
SG26
C 99999
LIN
M 1
126
SG50
M 1
MOA
M 1
137
SG50
M 1
MOA
M 1
138
SG27
R 99
SG27
R 1
SG29
R 1
SG34
R 1
PIA
C 1
127
IMD
R 1
128
QTY
R 1
129
MOA
M 1
130
MOA
M 1
131
PRI
M 1
132
TAX
M 1
133
MOA
C 2
134
MOA
C 2
135

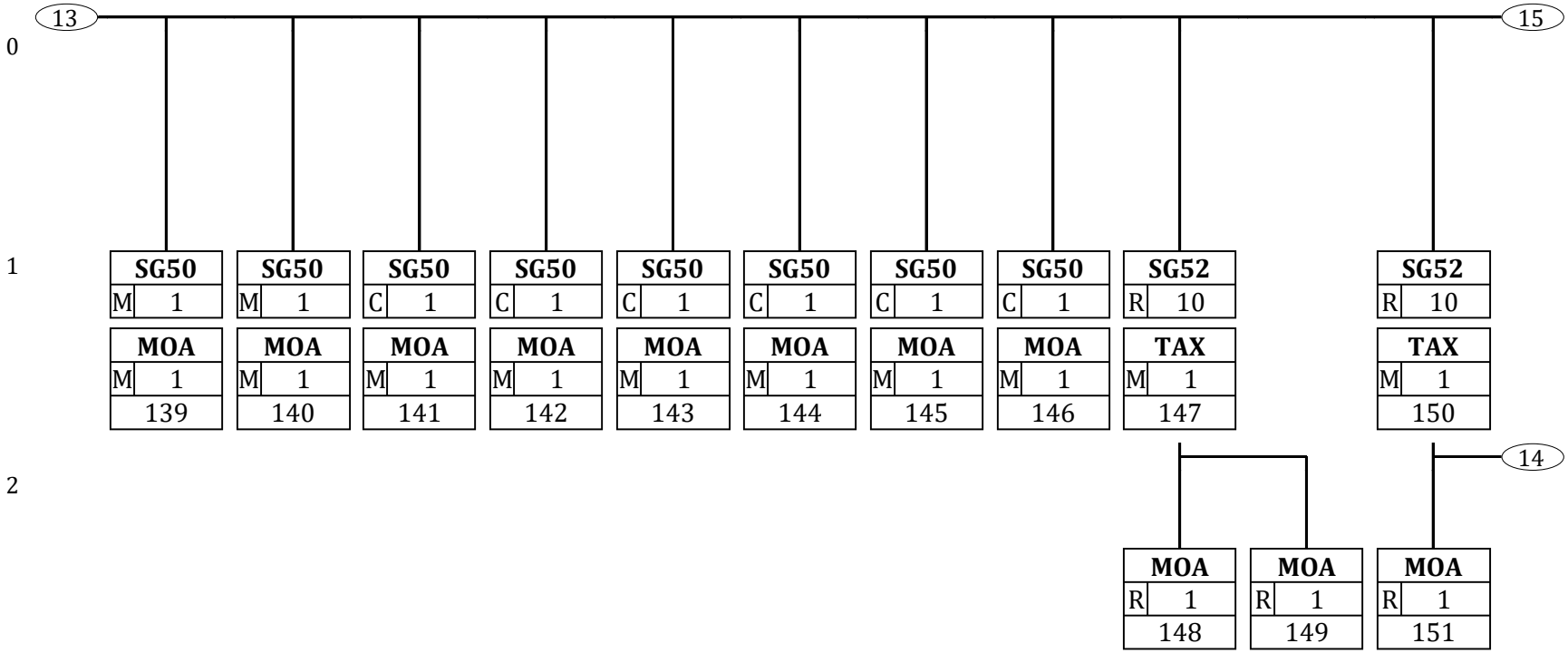
13
15
0
1
2
SG50 M 1
MOA M 1 139
SG50 M 1
MOA M 1 140
SG50 C 1
MOA M 1 141
SG50 C 1
MOA M 1 142
SG50 C 1
MOA M 1 143
SG50 C 1
MOA M 1 144
SG50 C 1
MOA M 1 145
SG50 C 1
MOA M 1 146
SG52 R 10
TAX M 1 147
MOA R 1 148
MOA R 1 149
SG52 R 10
TAX M 1 150
14
MOA R 1 151

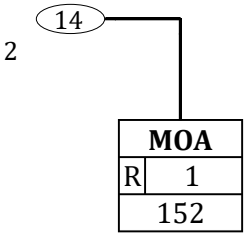
14
2
MOA
R
1
152

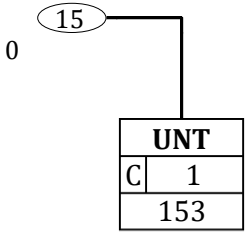
15
0
UNT
C
1
153

6 Segment details

Each segment is described by the elements and the directions for the use of these elements. The links to the business terms (BT) of the semantic model and the case value from the demonstration example of use[2] are listed. Displayed information is described in the document *e-SLOG 2.0 Electronic Invoice – Part 1: General Instructions,* Chapter 8.3.3.

Segment number: 1

UNH - M 1 - Message header

Function:

To head, identify and specify a message.

Notes:
1. Data element S009/0057 is retained for upward compatibility. The use of S016 and/or S017 is encouraged in preference.
2. The combination of the values carried in data elements 0062 and S009 shall be used to identify uniquely the message within its group (if used) or if not used, within its interchange, for the purpose of acknowledgement.

e-SLOG 2.0			EN 16931		
Tag	Name	Format	St	Usage	Example
0062	Message reference number	an..14	**M**		TOSL110
S009	MESSAGE IDENTIFIER		**M**		
0065	Message type	an..6	**M**	INVOIC = Invoice message	INVOIC
0052	Message version number	an..3	**M**	D = Draft version/UN/EDIFACT Directory	D
0054	Message release number	an..3	**M**	01B = Release 2001 - B	01B
0051	Controlling agency, coded	an..3	**M**	UN = UN/CEFACT	UN

Segment Notes:

[2] The demo example can be found in Annex C.

Segment number: 2

BGM	- M	1 - Beginning of message			
Function: To indicate the type and function of a message and to transmit the identifying number.					
e-SLOG 2.0			EN 16931		
Tag	Name	Format	St	Usage	Example
C002	DOCUMENT/MESSAGE NAME		**R**		
1001	Document name code	an..3	**R**	380 = Commercial invoice 381 = Credit note - goods and services BT:Invoice type code(BT-3) DESC:A code specifying the functional type of the Invoice.	380
C106	DOCUMENT/MESSAGE IDENTIFICATION		**R**		
1004	Document identifier	an..70	**R**	BT:Invoice number (BT-1) DESC:A unique identification of the Invoice.	TOSL110
Segment Notes:					

Segment number: 3

DTM	- M	1 - Date/time/period			
Function: To specify date, and/or time, or period.					
e-SLOG 2.0			EN 16931		
Tag	Name	Format	St	Usage	Example
C507	DATE/TIME/PERIOD		**M**		
2005	Date or time or period function code qualifier	an..3	**M**	137 = Document/message date/ time	137
2380	Date or time or period value	an..35	**R**	BT:Invoice issue date (BT-2) DESC:The date when the Invoice was issued.	2013-04-10
Segment Notes:					

Segment number: 4

DTM	- C	1 - Date/time/period			
Function: To specify date, and/or time, or period.					
e-SLOG 2.0			EN 16931		
Tag	Name	Format	St	Usage	Example
C507	DATE/TIME/PERIOD		**M**		
2005	Date or time or period function code qualifier	an..3	**M**	131 = Tax point date	131
2380	Date or time or period value	an..35	**R**	BT:Value added tax point date (BT-7) DESC:The date when the VAT becomes accountable for the Seller and for the Buyer in so far as that date can be determined and differs from the date of issue of the invoice, according to the VAT directive...	2013-04-10
Segment Notes:					

Segment number: 5

DTM - C 1 - Date/time/period					
Function: To specify date, and/or time, or period.					
e-SLOG 2.0			EN 16931		
Tag	Name	Format	St	Usage	Example
C507	DATE/TIME/PERIOD		**M**		
2005	Date or time or period function code qualifier	an..3	**M**	3 = Invoice date/time 35 = Delivery date/time, actual 432 = Paid to date BT:Value added tax point date code (BT-8) DESC:The code of the date when the VAT becomes accountable for the Seller and for the Buyer.	35
Segment Notes:					

Segment number: 6

DTM	- C	1 - Date/time/period			
Function: To specify date, and/or time, or period.					
e-SLOG 2.0			EN 16931		
Tag	Name	Format	St	Usage	Example
C507	DATE/TIME/PERIOD		**M**		
2005	Date or time or period function code qualifier	an..3	**M**	35 = Delivery date/time, actual	35
2380	Date or time or period value	an..35	**R**	BT:Actual delivery date (BT-72) DESC:The date on which the delivery is made.	2013-04-15
Segment Notes:					

Segment number: 7

DTM - C 1 - Date/time/period					
Function: To specify date, and/or time, or period.					
e-SLOG 2.0			EN 16931		
Tag	Name	Format	St	Usage	Example
C507	DATE/TIME/PERIOD		**M**		
2005	Date or time or period function code qualifier	an..3	**M**	167 = Charge period start date BT:DELIVERY OR INVOICE PERIOD (BG-14) DESC:A group of business terms providing information on the invoice period.	167
2380	Date or time or period value	an..35	**R**	BT:Invoicing period start date (BT-73) DESC:The date when the Invoice period starts.	2013-03-10
Segment Notes:					

Segment number: 8

DTM - C 1 - Date/time/period					
Function: To specify date, and/or time, or period.					
e-SLOG 2.0			EN 16931		
Tag	Name	Format	St	Usage	Example
C507	DATE/TIME/PERIOD		**M**		
2005	Date or time or period function code qualifier	an..3	**M**	168 = Charge period end date BT:DELIVERY OR INVOICE PERIOD (BG-14) DESC:A group of business terms providing information on the invoice period.	168
2380	Date or time or period value	an..35	**R**	BT:Invoicing period end date (BT-74) DESC:The date when the Invoice period ends.	2013-04-10
Segment Notes:					

Segment number: 9

FTX	- C	1 - Free text			
Function: To provide free form or coded text information.					
e-SLOG 2.0			EN 16931		
Tag	Name	Format	St	Usage	Example
4451	Text subject code qualifier	an..3	**M**	AAB = Terms of payments	AAB
4453	Free text function code	an..3	**N**	Not used	
C107	TEXT REFERENCE		**N**		
4441	Free text value code	an..17	**N**	Not used	
C108	TEXT LITERAL		**R**		
4440	Free text value	an..512	**M**	BT:Payment terms (BT-20) DESC:A textual description of the payment terms that apply to the amount due for payment (Including description of possible penalties).	50% prepaid, 50% within one month
4440	Free text value	an..512	**C**		Additional text line 2
4440	Free text value	an..512	**C**		Additional text line 3
4440	Free text value	an..512	**C**		Additional text line 4
4440	Free text value	an..512	**C**		Additional text line 5
Segment Notes:					

Segment number: 10

FTX	- C	1 - Free text			
Function: To provide free form or coded text information.					
e-SLOG 2.0			EN 16931		
Tag	Name	Format	St	Usage	Example
4451	Text subject code qualifier	an..3	**M**	REG = Regulatory information	REG
4453	Free text function code	an..3	**N**	Not used	
C107	TEXT REFERENCE		**N**		
4441	Free text value code	an..17	**N**	Not used	
C108	TEXT LITERAL		**R**		
4440	Free text value	an..512	**M**	BT:Seller additional legal information (BT-33) DESC:Additional legal information relevant for the Seller.	Export
Segment Notes:					

Segment number: 11

FTX	- C	99 - Free text			
Function: To provide free form or coded text information.					
e-SLOG 2.0			EN 16931		
Tag	Name	Format	St	Usage	Example
4451	Text subject code qualifier	an..3	**M**	GEN = Entire transaction set BT:Invoice note subject code (BT-21) DESC:The subject of the following textual note. Use UN code list 4451; GEN as default; others as appropriate	GEN
4453	Free text function code	an..3	**N**	Not used	
C107	TEXT REFERENCE		**N**		
4441	Free text value code	an..17	**N**	Not used	
C108	TEXT LITERAL		**R**		
4440	Free text value	an..512	**M**	BT:Invoice note (BT-22) DESC:A textual note that gives unstructured information that is relevant to the Invoice as a whole.	Ordered through our website
Segment Notes: BT:INVOICE NOTE (BG-1) DESC:A group of business terms providing textual notes that are relevant for the invoice, together with an indication of the note subject.					

Segment number: 12

FTX	- M	1 - Free text			
Function: To provide free form or coded text information.					
e-SLOG 2.0			EN 16931		
Tag	Name	Format	St	Usage	Example
4451	Text subject code qualifier	an..3	**M**	DOC = Documentation instructions	DOC
4453	Free text function code	an..3	**N**	Not used	
C107	TEXT REFERENCE		**C**		
4441	Free text value code	an..17	**M**	BT:Business process type (BT-23) DESC:Identifies the business process context in which the transaction appears, to enable the Buyer to process the Invoice in an appropriate way. P1 = Invoicing of deliveries of goods and services against purchase orders, based on a contract P2 = Invoicing deliveries of goods and services based on a contract P3 = Invoicing the delivery of an incidental purchase order P4 = Pre-payment P5 = Spot payment P6 = Payment in advance of delivery P7 = Invoices with references to a despatch advice P8 = Invoices with references to a despatch advice and a receiving advice P9 = Credit notes or invoices with negative amounts, issued for a variety of reasons including the return of empty packaging P10 = Corrective invoicing (cancellation/correction of an invoice) P11 = Partial and final invoicing P12 = Self billing	P1
C108	TEXT LITERAL		**R**		
4440	Free text value	an..512	**M**	BT:Specification identifier (BT-24) DESC:An identification of the specification containing the total set of rules regarding semantic content, cardinalities and business rules to which the data contained in the instance document conforms.	urn?:cen.eu?:en16931?:2017
Segment Notes: BT:PROCESS CONTROL (BG-2) DESC:A group of business terms providing information on the business process and rules applicable to the Invoice document.					

Segment number: 13

FTX	- C	1 - Free text			
Function: To provide free form or coded text information.					
e-SLOG 2.0			EN 16931		
Tag	Name	Format	St	Usage	Example
4451	Text subject code qualifier	an..3	**M**	AAT = Mode of settlement information	AAT
4453	Free text function code	an..3	**N**	Not used	
C107	TEXT REFERENCE		**N**		
4441	Free text value code	an..17	**N**	Not used	
C108	TEXT LITERAL		**R**		
4440	Free text value	an..512	**M**	BT:Payment means text (BT-82) DESC:The means, expressed as text, for how a payment is expected to be or has been settled. Code AAT may be used for other than IATA	Half prepaid
Segment Notes:					

Segment number: 14

FTX	- C	1 - Free text			
Function: To provide free form or coded text information.					
e-SLOG 2.0			EN 16931		
Tag	Name	Format	St	Usage	Example
4451	Text subject code qualifier	an..3	**M**	AGM = Exemption	AGM
4453	Free text function code	an..3	**N**	Not used	
C107	TEXT REFERENCE		**C**		
4441	Free text value code	an..17	**M**	BT:VAT exemption reason code (BT-121) DESC:A coded statement of the reason for why the amount is exempted from VAT.	
C108	TEXT LITERAL		**R**		
4440	Free text value	an..512	**M**	BT:VAT exemption reason text (BT-120) DESC:A textual statement of the reason why the amount is exempted from VAT or why no VAT is being charged.	Exempt New Means of Transport
Segment Notes:					

Segment number: 15

FTX	- C	1 - Free text			
Function: To provide free form or coded text information.					
e-SLOG 2.0			EN 16931		
Tag	Name	Format	St	Usage	Example
4451	Text subject code qualifier	an..3	**M**	PMD = Payment detail/remittance information	PMD
4453	Free text function code	an..3	**N**	Not used	
C107	TEXT REFERENCE		**N**		
4441	Free text value code	an..17	**N**	Not used	
C108	TEXT LITERAL		**R**		
4440	Free text value	an..512	**M**	BT:Remittance information (BT-83) (Unstructered remittance information) DESC:A textual value used to establish a link between the payment and the Invoice, issued by the Seller (unstructured).	TOSL110
Segment Notes:					

Segment number: 16

FTX	- C	1 - Free text			
Function: To provide free form or coded text information.					
e-SLOG 2.0			EN 16931		
Tag	Name	Format	St	Usage	Example
4451	Text subject code qualifier	an..3	**M**	TXD = Tax declaration	TXD
4453	Free text function code	an..3	**N**	Not used	
C107	TEXT REFERENCE		**N**		
4441	Free text value code	an..17	**N**	Not used	
C108	TEXT LITERAL		**R**		
4440	Free text value	an..512	**M**	BT: Date and time of issuing the invoice(NBT-020) DESC: Date and time of issuing the invoice in following format: YYYY-MMDDTHH:MM:SS.	2013-04-10T15?:03?:50
4440	Free text value	an..512	**R**	BT: Mark of an individual (operator) (NBT-021) DESC: The mark of an individual (operator), who issues the invoice with the usage of the electronic device for issuing invoices.	PRODAJALEC1
4440	Free text value	an..512	**R**	BT: EOR-Unique identification invoice mark(NBT-022) DESC: EOR-Unique identification invoice mark.	56dcaf93-933a-497d-b864-0ba1e8f4fa23
4440	Free text value	an..512	**R**	BT: ZOI-Protective mark of the invoice issuer(NBT-023) DESC: ZOI-Protective mark of the invoice issuer.	8402f0a963e37b2258e034fc8ae7ffc1
4440	Free text value	an..512	**R**	BT: Mark for printing QR code, PDF417 code and code 128 (NBT-024) DESC: Mark for printed code (60 numerical places) consisted of: ZOI, tax number of the person liable, date and time of issuing invoice and control character.	279042272585972554922067893753871413584876543211601021503002
Segment Notes: BT:FISCAL VERIFICATION OF INVOICES (NBG-2) DESC:A group of business terms providing information on Fiscal verification of invoices.					

Segment number: 17

FTX	- C	1 - Free text			
Function: To provide free form or coded text information.					
e-SLOG 2.0			EN 16931		
Tag	Name	Format	St	Usage	Example
4451	Text subject code qualifier	an..3	**M**	PAI = Payment instructions information	PAI
4453	Free text function code	an..3	**N**	Not used	
C107	TEXT REFERENCE		**N**		
4441	Free text value code	an..17	**N**	Not used	
C108	TEXT LITERAL		**R**		
4440	Free text value	an..512	**M**	BT: Payment method(NBT-041) DESC: Payment method.	0
Segment Notes:					

Segment number: 18

FTX	- C	1 - Free text			
Function: To provide free form or coded text information.					
e-SLOG 2.0			EN 16931		
Tag	Name	Format	St	Usage	Example
4451	Text subject code qualifier	an..3	**M**	ALQ = Purpose of service	ALQ
4453	Free text function code	an..3	**N**	Not used	
C107	TEXT REFERENCE		**N**		
4441	Free text value code	an..17	**N**	Not used	
C108	TEXT LITERAL		**R**		
4440	Free text value	an..512	**M**	BT: Payment purpose(NBT-042) DESC: Purpose for payment.	OTHR
Segment Notes:					

Segment number: 19

SG1	- C	1	- RFF
RFF	- M	1	- Reference

Function:

To specify a reference.

e-SLOG 2.0			EN 16931		
Tag	Name	Format	St	Usage	Example
C506	REFERENCE		**M**		
1153	Reference code qualifier	an..3	**M**	AEP = Project number	AEP
1154	Reference identifier	an..70	**R**	BT:Project reference (BT-11) DESC:The identification of the project the invoice refers to.	Project345

Segment Notes:

Segment number: 20

SG1	- C	1	- RFF
RFF	- M	1	- Reference

Function:

To specify a reference.

e-SLOG 2.0			EN 16931		
Tag	Name	Format	St	Usage	Example
C506	REFERENCE		**M**		
1153	Reference code qualifier	an..3	**M**	CT = Contract number	CT
1154	Reference identifier	an..70	**R**	BT:Contract reference (BT-12) DESC:The identification of a contract.	2013-05

Segment Notes:

Segment number: 21

SG1	- C	1 -	RFF
RFF	- M	1 -	Reference

Function:

To specify a reference.

e-SLOG 2.0			EN 16931		
Tag	Name	Format	St	Usage	Example
C506	REFERENCE		**M**		
1153	Reference code qualifier	an..3	**M**	ON = Order number (buyer)	ON
1154	Reference identifier	an..70	**R**	BT:Purchase order reference (BT-13) DESC:An identifier of a referenced purchase order, issued by the Buyer.	PO4711

Segment Notes:

Segment number: 22

SG1	- C	1	- RFF
RFF	- M	1	- Reference

Function:

To specify a reference.

e-SLOG 2.0			EN 16931		
Tag	Name	Format	St	Usage	Example
C506	REFERENCE		**M**		
1153	Reference code qualifier	an..3	**M**	VN = Order number (supplier)	VN
1154	Reference identifier	an..70	**R**	BT:Sales order reference (BT-14) DESC:An identifier of a referenced sales order, issued by the Seller..	123

Segment Notes:

Segment number: 23

SG1	- C	1 -	RFF
RFF	- M	1 -	Reference

Function:

To specify a reference.

e-SLOG 2.0			EN 16931		
Tag	Name	Format	St	Usage	Example
C506	REFERENCE		**M**		
1153	Reference code qualifier	an..3	**M**	ALO = Receiving advice number	ALO
1154	Reference identifier	an..70	**R**	BT:Receiving advice reference (BT-15) DESC:An identifier of a referenced receiving advice.	3544

Segment Notes:

Segment number: 24

SG1	- C	1	- RFF
RFF	- M	1	- Reference

Function:

To specify a reference.

e-SLOG 2.0			EN 16931		
Tag	Name	Format	St	Usage	Example
C506	REFERENCE		**M**		
1153	Reference code qualifier	an..3	**M**	AAK = Despatch advice number	AAK
1154	Reference identifier	an..70	**R**	BT:Despatch advice reference (BT-16) DESC:An identifier of a referenced despatch advice.	5433

Segment Notes:

Segment number: 25

SG1	- C	1 -	RFF
RFF	- M	1 -	Reference

Function:

To specify a reference.

e-SLOG 2.0			EN 16931		
Tag	Name	Format	St	Usage	Example
C506	REFERENCE		**M**		
1153	Reference code qualifier	an..3	**M**	GC = Government contract number	GC
1154	Reference identifier	an..70	**R**	BT:Tender or lot reference (BT-17) DESC:The identification of the call for tender or lot the invoice relates to.	Lot567

Segment Notes:

Segment number: 26

SG1	- C	1	- RFF
RFF	- M	1	- Reference

Function:

To specify a reference.

e-SLOG 2.0			EN 16931		
Tag	Name	Format	St	Usage	Example
C506	REFERENCE		**M**		
1153	Reference code qualifier	an..3	**M**	ATS = External object reference BT:Scheme identifier(BT-18-1) DESC:The identification scheme identifier of the Invoiced object identifier. Use UN code list 1153; Use ATS as default value	ATS
1154	Reference identifier	an..70	**R**	BT:Invoiced object identifier (BT-18) DESC:The identification of the call for tender or lot the invoice relates to.	OBJ999

Segment Notes:

Segment number: 27

SG1	- C	99999	-	RFF-DTM
RFF	- M	1	-	Reference

Function:

To specify a reference.

e-SLOG 2.0			EN 16931		
Tag	Name	Format	St	Usage	Example
C506	REFERENCE		**M**		
1153	Reference code qualifier	an..3	**M**	OI = Previous invoice number	OI
1154	Reference identifier	an..70	**R**	BT:Preceding Invoice number (BT-25) DESC:The identification of an Invoice that was previously sent by the Seller..	TOSL109

Segment Notes:

Segment number: 28

SG1	- C	99999	- RFF-DTM
DTM	- C	1	- Date/time/period

Function:

To specify date, and/or time, or period.

e-SLOG 2.0			EN 16931		
Tag	Name	Format	St	Usage	Example
C507	DATE/TIME/PERIOD		**M**		
2005	Date or time or period function code qualifier	an..3	**M**	384 = Previous invoice date	384
2380	Date or time or period value	an..35	**R**	BT:Preceding Invoice issue date(BT-26) DESC:The date when the Preceding Invoice was issued.	2013-03-10

Segment Notes:

Segment number: 29

SG1	- C	1 -	RFF
RFF	- M	1 -	Reference

Function:

To specify a reference.

e-SLOG 2.0			EN 16931		
Tag	Name	Format	St	Usage	Example
C506	REFERENCE		**M**		
1153	Reference code qualifier	an..3	**M**	PQ = Payment reference	PQ
1154	Reference identifier	an..70	**R**	BT:Remittance information (BT-83) (Structered remittance information) DESC:A textual value used to establish a link between the payment and the Invoice, issued by the Seller (structured)..	Payref1

Segment Notes:

Segment number: 30

SG2	- R	1 -	NAD-FII-SG3-SG5
NAD	- M	1 -	Name and address

Function:

To specify the name/address and their related function, either by C082 only and/or unstructured by C058 or structured by C080 thru 3207.

e-SLOG 2.0			EN 16931		
Tag	Name	Format	St	Usage	Example
3035	Party function code qualifier	an..3	**M**	BY = Buyer BT:BUYER (BG-7) DESC:A group of business terms providing information about the Buyer.	BY
C082	PARTY IDENTIFICATION DETAILS		**C**		
3039	Party identifier	an..35	**M**	BT:Buyer identifier(BT-46) DESC:An identifier of the Buyer..	579000043 6057
1131	Code list identification code	an..17	**C**	BT:Buyer identifier identification scheme identifier(BT-46-1) DESC:The identification scheme identifier of the Buyer identifier. Use ISO 6523 ICD list; e.g. 0088 = Global Location Number (GLN); 0060 = Data Universal Numbering System (D-U-N-S)	0088
C058	NAME AND ADDRESS		**N**		
3124	Name and address description	an..35	**N**	Not used	
C080	PARTY NAME		**R**		
3036	Party name	an..70	**M**	BT:Buyer name(BT-44) DESC:The full name of the Buyer.	BuyerComp any ltd
3036	Party name	an..70	**C**	BT:Buyer trading name(BT-45) DESC:A name by which the Buyer is known, other than Buyer name (also known as Business name).	Buyco
C059	STREET		**C**		
3042	Street and number or post office box identifier	an..35	**M**	BT:Buyer address line 1(BT-50) DESC:The main address line in an address.	Anystreet, Building 1
3042	Street and number or post office box identifier	an..35	**C**	BT:Buyer address line 2(BT-51) DESC:An additional address line in an address that can be used to give further details supplementing the main line.	5th floor
3042	Street and number or post office box identifier	an..35	**C**	BT:Buyer address line 3(BT-163) DESC:An additional address line in an address that can be used to give further details supplementing the main line.	5th door
3164	City name	an..35	**C**	BT:Buyer city(BT-52) DESC:The common name of the city, town or village, where the Buyer's address is located.	Anytown
C819	COUNTRY SUB-ENTITY DETAILS		**C**		

Segment number: 30

e-SLOG 2.0			EN 16931		
Tag	Name	Format	St	Usage	Example
3229	Country sub-entity name code	an..9	**N**	Not used	
1131	Code list identification code	an..17	**N**	Not used	
3055	Code list responsible agency code	an..3	**N**	Not used	
3228	Country sub-entity name	an..70	**R**	BT:Buyer country subdivision(BT-54) DESC:The subdivision of a country.	Jutland
3251	Postal identification code	an..17	**C**	BT:Buyer post code(BT-53) DESC:The identifier for an addressable group of properties according to the relevant postal service.	101
3207	Country name code	an..3	**R**	BT:Buyer country code(BT-55) DESC:A code that identifies the country.	DK

Segment Notes:

BT:BUYER POSTAL ADDRESS (BG-8)
DESC:A group of business terms providing information about the postal address for the Buyer.

Segment number: 31

SG2	- R	1 -	NAD-FII-SG3-SG5
FII	- C	1 -	Financial institution information

Function:

To identify an account and a related financial institution.

e-SLOG 2.0			EN 16931		
Tag	Name	Format	St	Usage	Example
3035	Party function code qualifier	an..3	**M**	PB = Paying financial institution BT:PAYMENT CARD INFORMATION(BG-18) DESC:A group of business terms providing information about card used for payment contemporaneous with invoice issuance.	PB
C078	ACCOUNT HOLDER IDENTIFICATION		**R**		
3194	Account holder identifier	an..35	**R**	BT:Payment card primary account number(BT-87) DESC:The Primary Account Number (PAN) of the card used for payment	510510?*?*?*?*?*?*510 0
3192	Account holder name	an..35	**C**	BT:Payment card holder name(BT-88) DESC:The name of the payment card holder.	John hansen

Segment Notes:

Segment number: 32

SG2	- R	1 -	NAD-FII-SG3-SG5
FII	- C	1 -	Financial institution information

Function:

To identify an account and a related financial institution.

e-SLOG 2.0			EN 16931		
Tag	Name	Format	St	Usage	Example
3035	Party function code qualifier	an..3	**M**	BI = Buyer's financial institution BT:DIRECT DEBIT(BG-19) DESC:A group of business terms to specify a direct debit.	BI
C078	ACCOUNT HOLDER IDENTIFICATION		**R**		
3194	Account holder identifier	an..35	**R**	BT:Debited account identifier(BT-91) DESC:The account to be debited by the direct debit.	DK1212341234123412

Segment Notes:

Segment number: 33

SG2	- R	1 -	NAD-FII-SG3-SG5
FII	- C	1 -	Financial institution information

Function:

To identify an account and a related financial institution.

e-SLOG 2.0			EN 16931		
Tag	Name	Format	St	Usage	Example
3035	Party function code qualifier	an..3	**M**	BB = Buyer bank identification BT:RECEIVING BANK ACCOUNT(NBG-01) DESC:A group of business terms to specify a receiving bank account.	BB
C078	ACCOUNT HOLDER IDENTIFICATION		**R**		
3194	Account holder identifier	an..35	**R**	BT:Receiving bank account identifier-IBAN (NBT-010) DESC:A unique identifier of the financial receiving account.	DK1212341234123412
3192	Account holder name	an..35	**C**	BT:Receiving bank account holder name(NBT-011) DESC:The name of the bank receiving account holder.	BuyerCompany ltd
C088	INSTITUTION IDENTIFICATION		**R**		
3433	Institution name code	an..11	**R**	BT:Receiving bank identifier-BIC(NBT-012) DESC:An identifier for the receiving bank.	DNBANOKK

Segment Notes:

Segment number: 34

SG2	- R	1 -	NAD-FII-SG3-SG5
SG3	- C	1 -	RFF
RFF	- M	1 -	Reference

Function:

To specify a reference.

e-SLOG 2.0			EN 16931		
Tag	Name	Format	St	Usage	Example
C506	REFERENCE		**M**		
1153	Reference code qualifier	an..3	**M**	CR = Customer reference number	CR
1154	Reference identifier	an..70	**R**	BT:Buyer reference (BT-10) DESC:An identifier assigned by the Buyer used for internal routing purposes.	qwerty

Segment Notes:

Segment number: 35

SG2	- R	1 -	NAD-FII-SG3-SG5
SG3	- C	1 -	RFF
RFF	- M	1 -	Reference

Function:

To specify a reference.

e-SLOG 2.0			EN 16931		
Tag	Name	Format	St	Usage	Example
C506	REFERENCE		**M**		
1153	Reference code qualifier	an..3	**M**	AOU = Cost account	AOU
1154	Reference identifier	an..70	**R**	BT:Buyer accounting reference (BT-19) DESC:A textual value that specifies where to book the relevant data into the Buyer's financial accounts.	67543

Segment Notes:

Segment number: 36

SG2	- R	1 -	NAD-FII-SG3-SG5
SG3	- C	1 -	RFF
RFF	- M	1 -	Reference

Function:

To specify a reference.

e-SLOG 2.0			EN 16931		
Tag	Name	Format	St	Usage	Example
C506	REFERENCE		**M**		
1153	Reference code qualifier	an..3	**M**	GN = Government reference number BT:Buyer legal registration identifier identification scheme identifier (BT-47-1). DESC:The identification scheme identifier of the Buyer legal registration identifier.	GN
1154	Reference identifier	an..70	**R**	BT:Buyer legal registration identifier (BT-47) DESC:An identifier issued by an official registrar that identifies the Buyer as a legal entity or person.	DK16356607

Segment Notes:

Segment number: 37

SG2	- R	1 -	NAD-FII-SG3-SG5
SG3	- C	1 -	RFF
RFF	- M	1 -	Reference

Function:

To specify a reference.

e-SLOG 2.0			EN 16931		
Tag	Name	Format	St	Usage	Example
C506	REFERENCE		**M**		
1153	Reference code qualifier	an..3	**M**	VA = VAT registration number	VA
1154	Reference identifier	an..70	**R**	BT:Buyer VAT identifier (BT-48) DESC:The Buyer's VAT identifier (also known as Buyer VAT identification number).	DK16356607

Segment Notes:

Segment number: 38

SG2	- R	1 -	NAD-FII-SG3-SG5
SG3	- R	1 -	RFF
RFF	- M	1 -	Reference

Function:

To specify a reference.

e-SLOG 2.0			EN 16931		
Tag	Name	Format	St	Usage	Example
C506	REFERENCE		**M**		
1153	Reference code qualifier	an..3	**M**	AHP = Tax registration number	AHP
1154	Reference identifier	an..70	**R**	BT:Buyer tax registration number (NBT-013) DESC:The local identification of the Buyer for tax purposes.	DK16356607

Segment Notes:

Segment number: 39

SG2	- R	1 -	NAD-FII-SG3-SG5
SG3	- C	1 -	RFF
RFF	- M	1 -	Reference

Function:

To specify a reference.

e-SLOG 2.0			EN 16931		
Tag	Name	Format	St	Usage	Example
C506	REFERENCE		**M**		
1153	Reference code qualifier	an..3	**M**	AVS = Mandate Reference BT:DIRECT DEBIT(BG-19) DESC:A group of business terms to specify a direct debit.	AVS
1154	Reference identifier	an..70	**R**	BT:Mandate reference identifier (BT-89) DESC:Unique identifier assigned by the Payee for referencing the direct debit mandate.	123456

Segment Notes:

Segment number: 40

SG2	- R	1 -	NAD-FII-SG3-SG5
SG3	- C	1 -	RFF
RFF	- M	1 -	Reference

Function:

To specify a reference.

e-SLOG 2.0			EN 16931		
Tag	Name	Format	St	Usage	Example
C506	REFERENCE		**M**		
1153	Reference code qualifier	an..3	**M**	AII = Bank's common transaction reference number BT:DIRECT DEBIT(BG-19) DESC:A group of business terms to specify a direct debit.	AII
1154	Reference identifier	an..70	**R**	BT:Bank assigned creditor identifier (BT-90) DESC:Unique banking reference identifier of the Payee or Seller assigned by the Payee or Seller bank.	DK5678

Segment Notes:

Segment number: 41

SG2	- R	1	- NAD-FII-SG3-SG5
SG5	- C	1	- CTA-COM
CTA	- M	1	- Contact information

Function:

To identify a person or a department to whom communication should be directed.

e-SLOG 2.0			EN 16931		
Tag	Name	Format	St	Usage	Example
3139	Contact function code	an..3	**R**	IC = Information contact	IC

Segment Notes:

Segment number: 42

SG2	- R	1 -	NAD-FII-SG3-SG5
SG5	- C	1 -	CTA-COM
COM	- C	1 -	Communication contact

Function:

To identify a communication number of a department or a person to whom communication should be directed.

e-SLOG 2.0			EN 16931		
Tag	Name	Format	St	Usage	Example
C076	COMMUNICATION CONTACT		**M**		
3148	Communication address identifier	an..512	**M**	BT:Buyer electronic address(BT-49) DESC:Identifies the Buyer's electronic address to which a business document should be delivered.	info@buyer company.dk
3155	Communication address code qualifier	an..3	**M**	EM = Electronic mail BT:Buyer electronic address identification scheme identifier (BT-49-1) DESC:The identification scheme identifier of the Buyer electronic address. Use EM (= Email) as default; look at code list mapping for other values	EM

Segment Notes:

Segment number: 43

SG2	- R	1	- NAD-FII-SG3-SG5
SG5	- C	1	- CTA-COM
CTA	- M	1	- Contact information

Function:

To identify a person or a department to whom communication should be directed.

e-SLOG 2.0			EN 16931		
Tag	Name	Format	St	Usage	Example
3139	Contact function code	an..3	**R**	PD = Purchasing contact BT:BUYER CONTACT(BG-9) DESC:A group of business terms providing contact information relevant for the Buyer.	PD
C056	DEPARTMENT OR EMPLOYEE DETAILS		**C**		
3413	Department or employee name code	an..17	**R**	BT:Buyer contact point(BT-56) DESC:A contact point for a legal entity or person.	John Hansen

Segment Notes:

Segment number: 44

SG2	- R	1 -	NAD-FII-SG3-SG5
SG5	- C	1 -	CTA-COM
COM	- C	1 -	Communication contact

Function:

To identify a communication number of a department or a person to whom communication should be directed.

e-SLOG 2.0			EN 16931		
Tag	Name	Format	St	Usage	Example
C076	COMMUNICATION CONTACT		**M**		
3148	Communication address identifier	an..512	**M**	BT:Buyer contact email address(BT-58) DESC:An e-mail address for the contact point.	info@buyer company.dk
3155	Communication address code qualifier	an..3	**M**	EM = Electronic mail	EM

Segment Notes:

Segment number: 45

SG2	- R	1	- NAD-FII-SG3-SG5
SG5	- C	1	- CTA-COM
COM	- C	1	- Communication contact

Function:

To identify a communication number of a department or a person to whom communication should be directed.

e-SLOG 2.0			EN 16931		
Tag	Name	Format	St	Usage	Example
C076	COMMUNICATION CONTACT		**M**		
3148	Communication address identifier	an..512	**M**	BT:Buyer contact telephone number. (BT-57) DESC:A phone number for the contact point.	459898989 8
3155	Communication address code qualifier	an..3	**M**	TE = Telephone	TE

Segment Notes:

Segment number: 46

SG2	- R	1 -	NAD-FII-SG3-SG5
NAD	- M	1 -	Name and address

Function:

To specify the name/address and their related function, either by C082 only and/or unstructured by C058 or structured by C080 thru 3207.

e-SLOG 2.0			EN 16931		
Tag	Name	Format	St	Usage	Example
3035	Party function code qualifier	an..3	**M**	SE = Seller BT:SELLER (BG-5) DESC:A group of business terms providing information about the Seller.	SE
C082	PARTY IDENTIFICATION DETAILS		**C**		
3039	Party identifier	an..35	**M**	BT:Seller identifier(BT-29) DESC:An identification of the Seller.	5790000434101
1131	Code list identification code	an..17	**C**	BT:Seller identifier identification scheme identifier(BT-29-1) DESC:The identification scheme identifier of the Seller identifier. Use ISO 6523 ICD list; e.g. 0088 = Global Location Number (GLN); 0060 = Data Universal Numbering System (D-U-N-S)	0088
C058	NAME AND ADDRESS		**N**		
3124	Name and address description	an..35	**N**	Not used	
C080	PARTY NAME		**R**		
3036	Party name	an..70	**M**	BT:Seller name(BT-27) DESC:The full formal name by which the Seller is registered in the national registry of legal entities or as a Taxable person or otherwise trades as a person or persons.	SellerCompany
3036	Party name	an..70	**C**	BT:Seller trading name(BT-28) DESC:A name by which the Seller is known, other than Seller name (also known as Business name).	SelCo
C059	STREET		**C**		
3042	Street and number or post office box identifier	an..35	**M**	BT:Seller address line 1(BT-35) DESC:The main address line in an address.	Hoofdstraat 4
3042	Street and number or post office box identifier	an..35	**C**	BT:Seller address line 2(BT-36) DESC:An additional address line in an address that can be used to give further details supplementing the main line.	Om de hoek
3042	Street and number or post office box identifier	an..35	**C**	BT:Seller address line 3(BT-162) DESC:An additional address line in an address that can be used to give further details supplementing the main line.	Om de hoek 2
3164	City name	an..35	**C**	BT:Seller city(BT-37) DESC:The common name of the city,	Grootstad

Segment number: 46

e-SLOG 2.0			EN 16931		
Tag	Name	Format	St	Usage	Example
				town or village, where the Seller address is located.	
C819	COUNTRY SUB-ENTITY DETAILS		**C**		
3229	Country sub-entity name code	an..9	**N**	Not used	
1131	Code list identification code	an..17	**N**	Not used	
3055	Code list responsible agency code	an..3	**N**	Not used	
3228	Country sub-entity name	an..70	**R**	BT:Seller country subdivision(BT-39) DESC:The subdivision of a country.	Overijssel
3251	Postal identification code	an..17	**C**	BT:Seller post code(BT-38) DESC:The identifier for an addressable group of properties according to the relevant postal service.	54321
3207	Country name code	an..3	**R**	BT:Seller country code(BT-40) DESC:A code that identifies the country.	NL

Segment Notes:

BT:SELLER POSTAL ADDRESS (BG-5)
DESC:A group of business terms providing information about the address of the Seller.

Segment number: 47

SG2	- R	1 -	NAD-FII-SG3-SG5
FII	- C	1 -	Financial institution information

Function:

To identify an account and a related financial institution.

e-SLOG 2.0			EN 16931		
Tag	Name	Format	St	Usage	Example
3035	Party function code qualifier	an..3	**M**	RB = Receiving financial institution	RB
C078	ACCOUNT HOLDER IDENTIFICATION		**R**		
3194	Account holder identifier	an..35	**R**	BT:Payment account identifier(BT-84) DESC:A unique identifier of the financial payment account, at a payment service provider, to which payment should be made.	DK1212341234123412
3192	Account holder name	an..35	**C**	BT:Payment account name(BT-85) DESC:The name of the payment account, at a payment service provider, to which payment should be made.	SellerCompany
C088	INSTITUTION IDENTIFICATION		**C**		
3433	Institution name code	an..11	**R**	BT:Payment service provider identifier(BT-86) DESC:An identifier for the payment service provider where a payment account is located.	DNBANOKK

Segment Notes:

BT:CREDIT TRANSFER(BG-17)
DESC:A group of business terms to specify credit transfer payments.

Segment number: 48

SG2	- R	1 -	NAD-FII-SG3-SG5
SG3	- C	1 -	RFF
RFF	- M	1 -	Reference

Function:

To specify a reference.

e-SLOG 2.0			EN 16931		
Tag	Name	Format	St	Usage	Example
C506	REFERENCE		**M**		
1153	Reference code qualifier	an..3	**M**	GN = Government reference number BT:Seller legal registration identifier identification scheme identifier (BT-30-1). DESC:The identification scheme identifier of the Seller legal registration identifier.	GN
1154	Reference identifier	an..70	**R**	BT:Seller legal registration identifier (BT-30) DESC:An identifier issued by an official registrar that identifies the Seller as a legal entity or person.	NL16356706

Segment Notes:

Segment number: 49

SG2	- R	1 -	NAD-FII-SG3-SG5
SG3	- C	1 -	RFF
RFF	- M	1 -	Reference

Function:

To specify a reference.

e-SLOG 2.0			EN 16931		
Tag	Name	Format	St	Usage	Example
C506	REFERENCE		**M**		
1153	Reference code qualifier	an..3	**M**	VA = VAT registration number	VA
1154	Reference identifier	an..70	**R**	BT:Seller VAT identifier (BT-31) DESC:The Seller's VAT identifier (also known as Seller VAT identification number).	NL16356706

Segment Notes:

Segment number: 50

SG2	- R	1 -	NAD-FII-SG3-SG5
SG3	- R	1 -	RFF
RFF	- M	1 -	Reference

Function:

To specify a reference.

e-SLOG 2.0			EN 16931		
Tag	Name	Format	St	Usage	Example
C506	REFERENCE		**M**		
1153	Reference code qualifier	an..3	**M**	AHP = Tax registration number	AHP
1154	Reference identifier	an..70	**R**	BT:Seller tax registration identifier (BT-32) DESC:The local identification (defined by the Seller's address) of the Seller for tax purposes or a reference that enables the Seller to state his registered tax status.	NL16356706

Segment Notes:

Segment number: 51

SG2	- R	1	- NAD-FII-SG3-SG5
SG5	- C	1	- CTA-COM
CTA	- M	1	- Contact information

Function:

To identify a person or a department to whom communication should be directed.

e-SLOG 2.0			EN 16931		
Tag	Name	Format	St	Usage	Example
3139	Contact function code	an..3	**R**	IC = Information contact	IC

Segment Notes:

Segment number: 52

SG2	- R	1 -	NAD-FII-SG3-SG5
SG5	- C	1 -	CTA-COM
COM	- C	5 -	Communication contact

Function:

To identify a communication number of a department or a person to whom communication should be directed.

e-SLOG 2.0			EN 16931		
Tag	Name	Format	St	Usage	Example
C076	COMMUNICATION CONTACT		**M**		
3148	Communication address identifier	an..512	**M**	BT:Seller electronic address(BT-34) DESC:Identifies the Seller's electronic address to which a business document may be delivered.	info@selco.nl
3155	Communication address code qualifier	an..3	**M**	EM = Electronic mail BT:Seller electronic address identification scheme identifier (BT-34-1) DESC:The identification scheme identifier of the Seller electronic address Use EM (= Email) as default; look at code list mapping for other values	EM

Segment Notes:

Segment number: 53

SG2	- R	1 -	NAD-FII-SG3-SG5
SG5	- C	1 -	CTA-COM
CTA	- M	1 -	Contact information

Function:

To identify a person or a department to whom communication should be directed.

e-SLOG 2.0			EN 16931		
Tag	Name	Format	St	Usage	Example
3139	Contact function code	an..3	**R**	SU = Supplier contact BT:SELLER CONTACT (BG-6) DESC:A group of business terms providing contact information about the Seller.	SU
C056	DEPARTMENT OR EMPLOYEE DETAILS		**C**		
3413	Department or employee name code	an..17	**C**		
3412	Department or employee name	an..256	**R**	BT:Seller contact point(BT-41) DESC:A contact point for a legal entity or person.	Anthon Larsen

Segment Notes:

Segment number: 54

SG2	- R	1 -	NAD-FII-SG3-SG5
SG5	- C	1 -	CTA-COM
COM	- C	1 -	Communication contact

Function:

To identify a communication number of a department or a person to whom communication should be directed.

e-SLOG 2.0			EN 16931		
Tag	Name	Format	St	Usage	Example
C076	COMMUNICATION CONTACT		**M**		
3148	Communication address identifier	an..512	**M**	BT:Seller contact telephone number(BT-42) DESC:A phone number for the contact point.	319898989 8
3155	Communication address code qualifier	an..3	**M**	TE = Telephone	TE

Segment Notes:

Segment number: 55

SG2	- R	1 -	NAD-FII-SG3-SG5
SG5	- C	1 -	CTA-COM
COM	- C	1 -	Communication contact

Function:

To identify a communication number of a department or a person to whom communication should be directed.

e-SLOG 2.0			EN 16931		
Tag	Name	Format	St	Usage	Example
C076	COMMUNICATION CONTACT		**M**		
3148	Communication address identifier	an..512	**M**	BT:Seller contact email address(BT-43) DESC:An e-mail address for the contact point.	anthon@selco.nl
3155	Communication address code qualifier	an..3	**M**	EM = Electronic mail	EM

Segment Notes:

Segment number: 56

SG2	- C	1 -	NAD-SG3
NAD	- M	1 -	Name and address

Function:

To specify the name/address and their related function, either by C082 only and/or unstructured by C058 or structured by C080 thru 3207.

e-SLOG 2.0			EN 16931		
Tag	Name	Format	St	Usage	Example
3035	Party function code qualifier	an..3	**M**	PE = Payee BT:PAYEE (BG-10) DESC:A group of business terms providing information about the Payee, i.e. the role that receives the payment.	PE
C082	PARTY IDENTIFICATION DETAILS		**C**		
3039	Party identifier	an..35	**M**	BT:Payee identifier(BT-60) DESC:An identifier for the Payee.	DK16356608
1131	Code list identification code	an..17	**C**	BT:Payee identifier identification scheme identifier(BT-60-1) DESC:The identification scheme identifier of the Payee identifier. Use ISO 6523 ICD list; e.g. 0088 = Global Location Number (GLN); 0060 = Data Universal Numbering System (D-U-N-S)	
C058	NAME AND ADDRESS		**N**		
3124	Name and address description	an..35	**N**	Not used	
C080	PARTY NAME		**R**		
3036	Party name	an..70	**M**	BT:Payee name(BT-59) DESC:The name of the Payee.	Dagober Duck

Segment Notes:

BT:SELLER POSTAL ADDRESS (BG-5)
DESC:A group of business terms providing information about the address of the Seller.

Segment number: 57

SG2	- C	1 -	NAD-SG3
SG3	- C	1 -	RFF
RFF	- M	1 -	Reference

Function:

To specify a reference.

e-SLOG 2.0			EN 16931		
Tag	Name	Format	St	Usage	Example
C506	REFERENCE		**M**		
1153	Reference code qualifier	an..3	**M**	GN = Government reference number BT:Payee legal registration identifier identification scheme identifier (BT-61-1). DESC:The identification scheme identifier of the Payee legal registration identifier.	GN
1154	Reference identifier	an..70	**R**	BT:Payee legal registration identifier (BT-61) DESC:An identifier issued by an official registrar that identifies the Payee as a legal entity or person.	DK16356608?'

Segment Notes:

Segment number: 58

SG2	- C	1 -	NAD
NAD	- M	1 -	Name and address

Function:

To specify the name/address and their related function, either by C082 only and/or unstructured by C058 or structured by C080 thru 3207.

e-SLOG 2.0			EN 16931		
Tag	Name	Format	St	Usage	Example
3035	Party function code qualifier	an..3	**M**	DP = Delivery party BT:DELIVERY INFORMATION (BG-13) DESC:A group of business terms providing information about where and when the goods and services invoiced are delivered.	DP
C082	PARTY IDENTIFICATION DETAILS		**C**		
3039	Party identifier	an..35	**M**	BT:Deliver to location identifier(BT-71) DESC:An identifier for the location at which the goods and services are delivered.	579000436068
1131	Code list identification code	an..17	**C**	BT:Deliver to location identifier identification scheme identifier (BT-71-1) DESC:The identification scheme identifier of the Deliver to location identifier Use ISO 6523 ICD list; e.g. 0088 = Global Location Number (GLN); 0060 = Data Universal Numbering System (D-U-N-S)	0088
C058	NAME AND ADDRESS		**N**		
3124	Name and address description	an..35	**N**	Not used	
C080	PARTY NAME		**C**		
3036	Party name	an..70	**M**	BT:Deliver to party name(BT-70) DESC:The name of the party to which the goods and services are delivered.	Logistic service ltd
C059	STREET		**C**		
3042	Street and number or post office box identifier	an..35	**M**	BT:Deliver to address line 1(BT-75) DESC:The main address line in an address.	Delivery street
3042	Street and number or post office box identifier	an..35	**C**	BT:Deliver to address line 2(BT-76) DESC:An additional address line in an address that can be used to give further details supplementing the main line.	Gate 15
3042	Street and number or post office box identifier	an..35	**C**	BT:Deliver to address line 3(BT-165) DESC:An additional address line in an address that can be used to give further details supplementing the main line.	Floor 2
3164	City name	an..35	**C**	BT:Deliver to city(BT-77) DESC:The common name of the city, town or village, where the deliver to	Delivery city

Segment number: 58

e-SLOG 2.0			EN 16931		
Tag	Name	Format	St	Usage	Example
				address is located.	
C819	COUNTRY SUB-ENTITY DETAILS		**C**		
3229	Country sub-entity name code	an..9	**C**		
1131	Code list identification code	an..17	**C**		
3055	Code list responsible agency code	an..3	**C**		
3228	Country sub-entity name	an..70	**R**	BT:Deliver to country subdivision(BT-79) DESC: The subdivision of a country.	Jutland
3251	Postal identification code	an..17	**C**	BT:Deliver to post code(BT-78) DESC: The identifier for an addressable group of properties according to the relevant postal service.	9000
3207	Country name code	an..3	**R**	BT:Deliver to country code(BT-80) DESC:A code that identifies the country.	DK

Segment Notes:

BT:DELIVER TO ADDRESS(BG-15)
DESC:A group of business terms providing information about the address to which goods and services invoiced were or are delivered.

Segment number: 59

SG2	- C	1 -	NAD-SG3
NAD	- M	1 -	Name and address

Function:

To specify the name/address and their related function, either by C082 only and/or unstructured by C058 or structured by C080 thru 3207.

e-SLOG 2.0			EN 16931		
Tag	Name	Format	St	Usage	Example
3035	Party function code qualifier	an..3	**M**	LC = Party declaring the Value Added Tax (VAT) BT:SELLER TAX REPRESENTATIVE POSTAL ADDRESS (BG-12) DESC:A group of business terms providing information about the postal address for the tax representative party.	LC
C082	PARTY IDENTIFICATION DETAILS		**N**		
3039	Party identifier	an..35	**N**	Not used	
C058	NAME AND ADDRESS		**N**		
3124	Name and address description	an..35	**N**	Not used	
C080	PARTY NAME		**R**		
3036	Party name	an..70	**M**	BT:Seller tax representative name(BT-62) DESC:The full name of the Seller's tax representative party.	Dick Panama
C059	STREET		**C**		
3042	Street and number or post office box identifier	an..35	**M**	BT:Tax representative address line 1(BT-64) DESC:The main address line in an address.	AnyStreet, buliding 1
3042	Street and number or post office box identifier	an..35	**C**	BT:Tax representative address line 2(BT-65) DESC:An additional address line in an address that can be used to give further details supplementing the main line.	6th floor
3042	Street and number or post office box identifier	an..35	**C**	BT:Tax representative address line 3(BT-164) DESC:An additional address line in an address that can be used to give further details supplementing the main line.	6th door
3164	City name	an..35	**C**	BT:Tax representative city(BT-66) DESC:The common name of the city, town or village, where the tax representative address is located.	Anytown
C819	COUNTRY SUB-ENTITY DETAILS		**C**		
3229	Country sub-entity name code	an..9	**C**		
1131	Code list identification code	an..17	**C**		
3055	Code list responsible agency	an..3	**C**		

Segment number: 59

e-SLOG 2.0			EN 16931		
Tag	Name	Format	St	Usage	Example
	code				
3228	Country sub-entity name	an..70	**R**	BT:Tax representative country subdivision(BT-68) DESC:The subdivision of a country.	Jutland
3251	Postal identification code	an..17	**C**	BT:Tax representative post code(BT-67) DESC:The identifier for an addressable group of properties according to the relevant postal service.	101
3207	Country name code	an..3	**R**	BT:Tax representative country code(BT-69) DESC:A code that identifies the country.	DK

Segment Notes:

BT:SELLER TAX REPRESENTATIVE PARTY (BG-11)
DESC:A group of business terms providing information about the Seller's tax representative.

Segment number: 60

SG2	- C	1	- NAD-SG3
SG3	- R	1	- RFF
RFF	- M	1	- Reference

Function:

To specify a reference.

e-SLOG 2.0			EN 16931		
Tag	Name	Format	St	Usage	Example
C506	REFERENCE		**M**		
1153	Reference code qualifier	an..3	**M**	VA = VAT registration number	VA
1154	Reference identifier	an..70	**R**	BT:Seller tax representative VAT identifier (BT-63) DESC:The VAT identifier of the Seller's tax representative party.	DK16356609

Segment Notes:

Segment number: 61

SG7	- R	1 -	CUX
CUX	- M	1 -	Currencies

Function:

To specify currencies used in the transaction and relevant details for the rate of exchange.

e-SLOG 2.0			EN 16931		
Tag	Name	Format	St	Usage	Example
C504	CURRENCY DETAILS		**R**		
6347	Currency usage code qualifier	an..3	**M**	2 = Reference currency	2
6345	Currency identification code	an..3	**R**	BT:Invoice currency code(BT-5) DESC:The currency in which all Invoice amounts are given, except for the Total VAT amount in accounting currency. Use UN code list 6345	DKK

Segment Notes:

Segment number: 62

SG7	- C	1 -	CUX
CUX	- M	1 -	Currencies

Function:

To specify currencies used in the transaction and relevant details for the rate of exchange.

e-SLOG 2.0			EN 16931		
Tag	Name	Format	St	Usage	Example
C504	CURRENCY DETAILS		**R**		
6347	Currency usage code qualifier	an..3	**M**	6 = Information Currency	6
6345	Currency identification code	an..3	**R**	BT:VAT accounting currency code(BT-6) DESC:The currency used for VAT accounting and reporting purposes as accepted or required in the country of the Seller. Use UN code list 6345	EUR

Segment Notes:

Segment number: 63

SG8	- C	1	- PAT-DTM-PAI
PAT	- M	1	- Payment terms basis

Function:

To specify the payment terms basis.

Notes:
1. This segment will be removed effective with directory D.02B.

e-SLOG 2.0			EN 16931		
Tag	Name	Format	St	Usage	Example
4279	Payment terms type code qualifier	an..3	**M**	1 = Basic BT:PAYMENT INSTRUCTIONS(BG-16) DESC:A group of business terms providing information about the payment.	1

Segment Notes:

Segment number: 64

SG8	- C	1 -	PAT-DTM-PAI
DTM	- C	1 -	Date/time/period

Function:

To specify date, and/or time, or period.

e-SLOG 2.0			EN 16931		
Tag	Name	Format	St	Usage	Example
C507	DATE/TIME/PERIOD		**M**		
2005	Date or time or period function code qualifier	an..3	**M**	13 = Terms net due date	13
2380	Date or time or period value	an..35	**R**	BT:Payment due date (BT-9) DESC:The date when the payment is due.	2013-05-10

Segment Notes:

Segment number: 65

SG8	- C	1 -	PAT-DTM-PAI
PAI	- R	1 -	Payment instructions

Function:

To specify the instructions for payment.

e-SLOG 2.0			EN 16931		
Tag	Name	Format	St	Usage	Example
C534	PAYMENT INSTRUCTION DETAILS		**M**		
4439	Payment conditions code	an..3	**C**		
4431	Payment guarantee means code	an..3	**C**		
4461	Payment means code	an..3	**R**	BT:Payment means type codeS(BT-81) DESC:The means, expressed as code, for how a payment is expected to be or has been settled.	30

Segment Notes:

Segment number: 66

SG16	- C	9999	- ALC-SG19-SG20-SG22
ALC	- M	1	- Allowance or charge

Function:

To identify allowance or charge details.

e-SLOG 2.0			EN 16931		
Tag	Name	Format	St	Usage	Example
5463	Allowance or charge code qualifier	an..3	**M**	A = Allowance BT:DOCUMENT LEVEL ALLOWANCES(BG-20) DESC:A group of business terms providing information about allowances applicable to the Invoice as a whole.	A
C552	ALLOWANCE/CHARGE INFORMATION		**C**		
1230	Allowance or charge identifier	an..35	**C**	BT:Document level allowance reason(BT-97) DESC:The reason for the document level allowance, expressed as text.	Loyal customer
5189	Allowance or charge identification code	an..3	**C**	BT:Document level allowance reason code (BT-98) DESC:The reason for the document level allowance, expressed as a code.	42

Segment Notes:

Segment number: 67

SG16	- C	9999	-	ALC-SG19-SG20-SG22
SG19	- C	1	-	PCD
PCD	- M	1	-	Percentage details

Function:

To specify percentage information.

e-SLOG 2.0			EN 16931		
Tag	Name	Format	St	Usage	Example
C501	PERCENTAGE DETAILS		**M**		
5245	Percentage type code qualifier	an..3	**M**	1 = Allowance	1
5482	Percentage	n..10	**R**	BT:Document level allowance percentage(BT-94) DESC:The percentage that may be used, in conjunction with the document level allowance base amount, to calculate the document level allowance amount.	10

Segment Notes:

Segment number: 68

SG16	- C	9999	-	ALC-SG19-SG20-SG22
SG20	- R	1	-	MOA
MOA	- M	1	-	Monetary amount

Function:

To specify a monetary amount.

e-SLOG 2.0			EN 16931		
Tag	Name	Format	St	Usage	Example
C516	MONETARY AMOUNT		**M**		
5025	Monetary amount type code qualifier	an..3	**M**	204 = Allowance amount	204
5004	Monetary amount	n..35	**R**	BT:Document level allowance amount(BT-92) DESC:The amount of an allowance, without VAT.	150.00

Segment Notes:

Segment number: 69

SG16	- C	9999	-	ALC-SG19-SG20-SG22
SG20	- C	1	-	MOA
MOA	- M	1	-	Monetary amount

Function:

To specify a monetary amount.

e-SLOG 2.0			EN 16931		
Tag	Name	Format	St	Usage	Example
C516	MONETARY AMOUNT		**M**		
5025	Monetary amount type code qualifier	an..3	**M**	25 = Charge/allowance basis	25
5004	Monetary amount	n..35	**R**	BT:Document level allowance base amount(BT-93) DESC:The base amount that may be used, in conjunction with the document level allowance percentage, to calculate the document level allowance amount.	1500.00

Segment Notes:

Segment number: 70

SG16	- C	9999	- ALC-SG19-SG20-SG22
SG22	- C	1	- TAX
TAX	- M	1	- Duty/tax/fee details

Function:

To specify relevant duty/tax/fee information.

e-SLOG 2.0			EN 16931		
Tag	Name	Format	St	Usage	Example
5283	Duty or tax or fee function code qualifier	an..3	**M**	7 = Tax	7
C241	DUTY/TAX/FEE TYPE		**R**		
5153	Duty or tax or fee type name code	an..3	**R**	VAT = Value added tax	VAT
C533	DUTY/TAX/FEE ACCOUNT DETAIL		**N**		
5289	Duty or tax or fee account code	an..6	**N**	Not used	
5286	Duty or tax or fee assessment basis value	an..15	**C**		
C243	DUTY/TAX/FEE DETAIL		**C**		
5279	Duty or tax or fee rate code	an..7	**C**		
1131	Code list identification code	an..17	**C**		
3055	Code list responsible agency code	an..3	**C**		
5278	Duty or tax or fee rate	an..17	**R**	BT:Document level allowance VAT rate(BT-96) DESC:The VAT rate, represented as percentage that applies to the document level allowance.	25
5305	Duty or tax or fee category code	an..3	**R**	BT:Document level allowance VAT category code(BT-95) DESC:A coded identification of what VAT category applies to the document level allowance. S = Standard rate Z = Zero rated goods E = Exempt from tax AE = VAT Reverse Charge K = VAT exempt for EEA intra-community supply of goods and services G = Free export item, tax not charged O = Services outside scope of tax L = Canary Islands general indirect tax M = Tax for production, services and importation in Ceuta and Melilla	S

Segment Notes:

Segment number: 71

SG16	- C	9999	-	ALC-SG19-SG20-SG22
ALC	- M	1	-	Allowance or charge

Function:

To identify allowance or charge details.

e-SLOG 2.0			EN 16931		
Tag	Name	Format	St	Usage	Example
5463	Allowance or charge code qualifier	an..3	**M**	C = Charge BT:DOCUMENT LEVEL CHARGES(BG-21) DESC:A group of business terms providing information about charges and taxes other than VAT, applicable to the Invoice as a whole.	C
C552	ALLOWANCE/CHARGE INFORMATION		**C**		
1230	Allowance or charge identifier	an..35	**R**	BT:Document level charge reason(BT-104) DESC:The reason for the document level charge, expressed as text.	Packaging
4471	Settlement means code	an..3	**C**		
1227	Calculation sequence code	an..3	**C**		
C214	SPECIAL SERVICES IDENTIFICATION		**C**		
7161	Special service description code	an..3	**R**	BT:Document level charge reason code(BT-105) DESC:The reason for the document level charge, expressed as a code.	ABL

Segment Notes:

Segment number: 72

SG16	- C	9999	-	ALC-SG19-SG20-SG22
SG19	- C	1	-	PCD
PCD	- M	1	-	Percentage details

Function:

To specify percentage information.

e-SLOG 2.0			EN 16931		
Tag	Name	Format	St	Usage	Example
C501	PERCENTAGE DETAILS		**M**		
5245	Percentage type code qualifier	an..3	**M**	2 = Charge	2
5482	Percentage	n..10	**C**	BT:Document level charge percentage(BT-101) DESC:The percentage that may be used, in conjunction with the document level charge base amount, to calculate the document level charge amount.	10

Segment Notes:

Segment number: 73

SG16	- C	9999	-	ALC-SG19-SG20-SG22
SG20	- R	1	-	MOA
MOA	- M	1	-	Monetary amount

Function:

To specify a monetary amount.

e-SLOG 2.0			EN 16931		
Tag	Name	Format	St	Usage	Example
C516	MONETARY AMOUNT		**M**		
5025	Monetary amount type code qualifier	an..3	**M**	23 = Charge amount	23
5004	Monetary amount	n..35	**R**	BT:Document level charge amount(BT-99) DESC:The amount of a charge, without VAT.	150.00

Segment Notes:

Segment number: 74

SG16	- C	9999	-	ALC-SG19-SG20-SG22
SG20	- C	1	-	MOA
MOA	- M	1	-	Monetary amount

Function:

To specify a monetary amount.

e-SLOG 2.0			EN 16931		
Tag	Name	Format	St	Usage	Example
C516	MONETARY AMOUNT		**M**		
5025	Monetary amount type code qualifier	an..3	**M**	25 = Charge/allowance basis	25
5004	Monetary amount	n..35	**R**	BT:Document level charge base amount(BT-100) DESC:The base amount that may be used, in conjunction with the document level charge percentage, to calculate the document level charge amount.	1500.00

Segment Notes:

Segment number: 75

SG16	- C	9999	- ALC-SG19-SG20-SG22
SG22	- C	5	- TAX
TAX	- M	1	- Duty/tax/fee details

Function:

To specify relevant duty/tax/fee information.

e-SLOG 2.0			EN 16931		
Tag	Name	Format	St	Usage	Example
5283	Duty or tax or fee function code qualifier	an..3	**M**	7 = Tax	7
C241	DUTY/TAX/FEE TYPE		**R**		
5153	Duty or tax or fee type name code	an..3	**R**	VAT = Value added tax	VAT
C533	DUTY/TAX/FEE ACCOUNT DETAIL		**N**		
5289	Duty or tax or fee account code	an..6	**N**	Not used	
5286	Duty or tax or fee assessment basis value	an..15	**C**		
C243	DUTY/TAX/FEE DETAIL		**C**		
5279	Duty or tax or fee rate code	an..7	**C**		
1131	Code list identification code	an..17	**C**		
3055	Code list responsible agency code	an..3	**C**		
5278	Duty or tax or fee rate	an..17	**R**	BT:Document level charge VAT rate(BT-103) DESC:The VAT rate, represented as percentage that applies to the document level charge.	25
5305	Duty or tax or fee category code	an..3	**R**	BT:Document level charge VAT category code(BT-102) DESC:A coded identification of what VAT category applies to the document level charge. S = Standard rate Z = Zero rated goods E = Exempt from tax AE = VAT Reverse Charge K = VAT exempt for EEA intra-community supply of goods and services G = Free export item, tax not charged O = Services outside scope of tax L = Canary Islands general indirect tax M = Tax for production, services and importation in Ceuta and Melilla	S

Segment Notes:

Segment number: 76

SG26	- R	9999999	-	LIN-PIA-IMD-QTY-ALI-DTM-FTX-SG27-SG29-SG30-SG34-SG39
LIN	- M	1	-	Line item

Function:

To identify a line item and configuration.

e-SLOG 2.0			EN 16931		
Tag	Name	Format	St	Usage	Example
1082	Line item identifier	an..6	**R**	BT:Invoice line identifier(BT-126) DESC:A unique identifier for the individual line within the Invoice.	1
1229	Action request/notification description code	an..3	**C**		
C212	ITEM NUMBER IDENTIFICATION		**C**		
7140	Item identifier	an..35	**R**	BT:Item standard identifier(BT-157) DESC:An item identifier based on a registered scheme.	123456789 0128
7143	Item type identification code	an..3	**R**	BT:Item standard identifier identification scheme identifier (BT-157-1) DESC:The identification scheme identifier of the Item standard identifier Use UN code list 7143	SRV

Segment Notes:

Segment number: 77

SG26	- R	9999999	-	LIN-PIA-IMD-QTY-ALI-DTM-FTX-SG27-SG29-SG30-SG34-SG39
PIA	- C	1	-	Additional product id

Function:

To specify additional or substitutional item identification codes.

e-SLOG 2.0			EN 16931		
Tag	Name	Format	St	Usage	Example
4347	Product identifier code qualifier	an..3	**M**	5 = Product identification	5
C212	ITEM NUMBER IDENTIFICATION		**M**		
7140	Item identifier	an..35	**R**	BT:Item Seller's identifier(BT-155) DESC:An identifier, assigned by the Seller, for the item.	JB007
7143	Item type identification code	an..3	**R**	SA = Supplier's article number	SA

Segment Notes:

Segment number: 78

SG26	- R	9999999	-	LIN-PIA-IMD-QTY-ALI-DTM-FTX-SG27-SG29-SG30-SG34-SG39
PIA	- C	1	-	Additional product id

Function:

To specify additional or substitutional item identification codes.

e-SLOG 2.0			EN 16931		
Tag	Name	Format	St	Usage	Example
4347	Product identifier code qualifier	an..3	**M**	5 = Product identification	5
C212	ITEM NUMBER IDENTIFICATION		**M**		
7140	Item identifier	an..35	**R**	BT:Item Buyer's identifier(BT-156) DESC:An identifier, assigned by the Buyer, for the item.	BUY123
7143	Item type identification code	an..3	**R**	IN = Buyer's item number	IN

Segment Notes:

Segment number: 79

SG26	- R	9999999	-	LIN-PIA-IMD-QTY-ALI-DTM-FTX-SG27-SG29-SG30-SG34-SG39
PIA	- C	25	-	Additional product id

Function:

To specify additional or substitutional item identification codes.

e-SLOG 2.0			EN 16931		
Tag	Name	Format	St	Usage	Example
4347	Product identifier code qualifier	an..3	**M**	1 = Additional identification	1
C212	ITEM NUMBER IDENTIFICATION		**M**		
7140	Item identifier	an..35	**R**	BT:Item classification identifier(BT-158) DESC:A code for classifying the item by its type or nature.	123444321
7143	Item type identification code	an..3	**R**	BT:Item classification identifier identification scheme identifier (BT-158-1) DESC:The identification scheme identifier of the Item classification identifier BT:Scheme version identifer (BT-158-2) DESC:The version of the identification scheme.	ZZZ

Segment Notes:

Segment number: 80

SG26	- R	9999999	-	LIN-PIA-IMD-QTY-ALI-DTM-FTX-SG27-SG29-SG30-SG34-SG39
IMD	- R	1	-	Item description

Function:

To describe an item in either an industry or free format.

e-SLOG 2.0			EN 16931		
Tag	Name	Format	St	Usage	Example
7077	Description format code	an..3	**R**	F = Free-form	F
C272	ITEM CHARACTERISTIC		**N**		
7081	Item characteristic code	an..3	**N**	Not used	
C273	ITEM DESCRIPTION		**R**		
7009	Item description code	an..17	**C**		
1131	Code list identification code	an..17	**C**		
3055	Code list responsible agency code	an..3	**C**		
7008	Item description	an..256	**R**	BT:Item name(BT-153) DESC:A name for an item.	Printing paper

Segment Notes:

Segment number: 81

SG26	- R	9999999	-	LIN-PIA-IMD-QTY-ALI-DTM-FTX-SG27-SG29-SG30-SG34-SG39
IMD	- C	1	-	Item description

Function:

To describe an item in either an industry or free format.

e-SLOG 2.0			EN 16931		
Tag	Name	Format	St	Usage	Example
7077	Description format code	an..3	**R**	A = Free-form long description	A
C272	ITEM CHARACTERISTIC		**N**		
7081	Item characteristic code	an..3	**N**	Not used	
C273	ITEM DESCRIPTION		**R**		
7009	Item description code	an..17	**N**	Not used	
1131	Code list identification code	an..17	**N**	Not used	
3055	Code list responsible agency code	an..3	**N**	Not used	
7008	Item description	an..256	**R**	BT:Item description(BT-154) DESC:A description for an item.	printing paper, 2mm

Segment Notes:

Segment number: 82

SG26	- R	9999999	-	LIN-PIA-IMD-QTY-ALI-DTM-FTX-SG27-SG29-SG30-SG34-SG39
QTY	- R	1	-	Quantity

Function:

To specify a pertinent quantity.

e-SLOG 2.0			EN 16931		
Tag	Name	Format	St	Usage	Example
C186	QUANTITY DETAILS		**M**		
6063	Quantity type code qualifier	an..3	**M**	47 = Invoiced quantity	47
6060	Quantity	an..35	**R**	BT:Invoiced quantity(BT-129) DESC:The quantity of items (goods or services) that is charged in the Invoice line.	1000
6411	Measurement unit code	an..8	**R**	BT:Invoiced quantity unit of measure(BT-130) DESC:The unit of measure that applies to the invoiced quantity. Usage of Rec 20 with Rec 21 extensions is allowed as defined in usage note 2.a) of Rec 20	C62

Segment Notes:

Segment number: 83

SG26	- R	9999999	-	LIN-PIA-IMD-QTY-ALI-DTM-FTX-SG27-SG29-SG30-SG34-SG39
ALI	- C	1	-	Additional information

Function:

To indicate that special conditions due to the origin, customs preference, fiscal or commercial factors are applicable.

e-SLOG 2.0			EN 16931		
Tag	Name	Format	St	Usage	Example
3239	Country of origin name code	an..3	**R**	BT:Item country of origin(BT-159) DESC:The code identifying the country from which the item originates.	NL

Segment Notes:

Segment number: 84

SG26	- R	9999999	- LIN-PIA-IMD-QTY-ALI-DTM-FTX-SG27-SG29-SG30-SG34-SG39
DTM	- C	1	- Date/time/period

Function:

To specify date, and/or time, or period.

e-SLOG 2.0			EN 16931		
Tag	Name	Format	St	Usage	Example
C507	DATE/TIME/PERIOD		**M**		
2005	Date or time or period function code qualifier	an..3	**M**	167 = Charge period start date BT:INVOICE LINE PERIOD(BG-26) DESC:A group of business terms providing information about the period relevant for the Invoice line.	167
2380	Date or time or period value	an..35	**R**	BT:Invoice line period start date(BT-134) DESC:The date when the Invoice period for this Invoice line starts.	2013-03-10

Segment Notes:

Segment number: 85

SG26	- R	9999999	-	LIN-PIA-IMD-QTY-ALI-DTM-FTX-SG27-SG29-SG30-SG34-SG39
DTM	- C	1	-	Date/time/period

Function:

To specify date, and/or time, or period.

e-SLOG 2.0			EN 16931		
Tag	Name	Format	St	Usage	Example
C507	DATE/TIME/PERIOD		**M**		
2005	Date or time or period function code qualifier	an..3	**M**	168 = Charge period end date BT:INVOICE LINE PERIOD(BG-26) DESC:A group of business terms providing information about the period relevant for the Invoice line.	168
2380	Date or time or period value	an..35	**R**	BT:Invoice line period end date(BT-135) DESC:The date when the Invoice period for this Invoice line ends.	2013-04-10

Segment Notes:

Segment number: 86

SG26	- R	9999999	-	LIN-PIA-IMD-QTY-ALI-DTM-FTX-SG27-SG29-SG30-SG34-SG39
FTX	- C	1	-	Free text

Function:

To provide free form or coded text information.

e-SLOG 2.0			EN 16931		
Tag	Name	Format	St	Usage	Example
4451	Text subject code qualifier	an..3	**M**	ACB = Additional information	ACB
4453	Free text function code	an..3	**N**	Not used	
C107	TEXT REFERENCE		**N**		
4441	Free text value code	an..17	**N**	Not used	
C108	TEXT LITERAL		**R**		
4440	Free text value	an..512	**M**	BT:Invoice line noter(BT-127) DESC:A textual note that gives unstructured information that is relevant to the Invoice line.	first line

Segment Notes:

Segment number: 87

SG26	- R	9999999	- LIN-PIA-IMD-QTY-ALI-DTM-FTX-SG27-SG29-SG30-SG34-SG39
FTX	- C	99	- Free text

Function:

To provide free form or coded text information.

e-SLOG 2.0			EN 16931		
Tag	Name	Format	St	Usage	Example
4451	Text subject code qualifier	an..3	**M**	ACF = Additional attribute information	ACF
4453	Free text function code	an..3	**N**	Not used	
C107	TEXT REFERENCE		**N**		
4441	Free text value code	an..17	**N**	Not used	
C108	TEXT LITERAL		**R**		
4440	Free text value	an..512	**M**	BT:Item attribute name(BT-160) DESC:The name of the attribute or property of the item.	Thickness
4440	Free text value	an..512	**R**	BT:Item attribute value(BT-161) DESC:The value of the attribute or property of the item.	2 mm

Segment Notes:

BT:ITEM ATTRIBUTES(BG-32)
DESC:A group of business terms providing information about properties of the goods and services invoiced.

Segment number: 88

SG26	- R	9999999	-	LIN-PIA-IMD-QTY-ALI-DTM-FTX-SG27-SG29-SG30-SG34-SG39
SG27	- R	1	-	MOA
MOA	- M	1	-	Monetary amount

Function:

To specify a monetary amount.

e-SLOG 2.0			EN 16931		
Tag	Name	Format	St	Usage	Example
C516	MONETARY AMOUNT		**M**		
5025	Monetary amount type code qualifier	an..3	**M**	203 = Line item amount	203
5004	Monetary amount	n..35	**R**	BT:Invoice line net amount(BT-131) DESC:The total amount of the Invoice line.	1000.00

Segment Notes:

Segment number: 89

SG26	- R	9999999	-	LIN-PIA-IMD-QTY-ALI-DTM-FTX-SG27-SG29-SG30-SG34-SG39
SG27	- C	1	-	MOA
MOA	- M	1	-	Monetary amount

Function:

To specify a monetary amount.

e-SLOG 2.0			EN 16931		
Tag	Name	Format	St	Usage	Example
C516	MONETARY AMOUNT		**M**		
5025	Monetary amount type code qualifier	an..3	**M**	38 = Invoice item amount	38
5004	Monetary amount	n..35	**R**	BT:Invoice line net amount including VAT (NBT-031) DESC:The total amount of the Invoice line including VAT.	1250.00

Segment Notes:

Segment number: 90

SG26	- R	9999999	-	LIN-PIA-IMD-QTY-ALI-DTM-FTX-SG27-SG29-SG30-SG34-SG39
SG29	- R	1	-	PRI
PRI	- M	1	-	Price details

Function:

To specify price information.

e-SLOG 2.0			EN 16931		
Tag	Name	Format	St	Usage	Example
C509	PRICE INFORMATION		**R**		
5125	Price code qualifier	an..3	**M**	AAA = Calculation net BT:PRICE DETAILS(BG-29) DESC:A group of business terms providing information about the price applied for the goods and services invoiced on the Invoice line.	AAA
5118	Price amount	n..15	**R**	BT:Item net price(BT-146) DESC:The price of an item, exclusive of VAT, after subtracting item price discount.	1.0000
5375	Price type code	an..3	**C**		
5387	Price specification code	an..3	**C**		
5284	Unit price basis value	n..9	**C**	BT:Item price base quantity(BT-149) DESC:The number of item units to which the price applies.	1
6411	Measurement unit code	an..8	**C**	BT:Item price base quantity unit of measure code(BT-150) DESC:The unit of measure that applies to the Item price base quantity.	C62

Segment Notes:

Segment number: 91

SG26	- R	9999999	-	LIN-PIA-IMD-QTY-ALI-DTM-FTX-SG27-SG29-SG30-SG34-SG39
SG29	- C	1	-	PRI
PRI	- M	1	-	Price details

Function:

To specify price information.

e-SLOG 2.0			EN 16931		
Tag	Name	Format	St	Usage	Example
C509	PRICE INFORMATION		**R**		
5125	Price code qualifier	an..3	**M**	AAB = Calculation gross BT:PRICE DETAILS(BG-29) DESC:A group of business terms providing information about the price applied for the goods and services invoiced on the Invoice line.	AAB
5118	Price amount	n..15	**R**	BT:Item gross price(BT-148) DESC:The unit price, exclusive of VAT, before subtracting Item price discount.	1.1000
5375	Price type code	an..3	**C**		
5387	Price specification code	an..3	**C**		
5284	Unit price basis value	n..9	**C**	BT:Item price base quantity(BT-149) DESC:The number of item units to which the price applies.	1
6411	Measurement unit code	an..8	**C**	BT:Item price base quantity unit of measure code(BT-150) DESC:The unit of measure that applies to the Item price base quantity.	C62

Segment Notes:

Segment number: 92

SG26	- R	9999999	-	LIN-PIA-IMD-QTY-ALI-DTM-FTX-SG27-SG29-SG30-SG34-SG39
SG30	- C	1	-	RFF
RFF	- M	1	-	Reference

Function:

To specify a reference.

e-SLOG 2.0			EN 16931		
Tag	Name	Format	St	Usage	Example
C506	REFERENCE		**M**		
1153	Reference code qualifier	an..3	**M**	AVE = Metering point DESC:An identifier for an object on which the invoice line is based, given by the Seller. BT:Invoice line object identifier identification scheme identifier (BT-128-1)	AVE
1154	Reference identifier	an..70	**R**	BT:Invoice line object identifier(BT-128) DESC:An identifier for an object on which the invoice line is based, given by the Seller.	Object 2

Segment Notes:

Segment number: 93

SG26	- R	9999999	-	LIN-PIA-IMD-QTY-ALI-DTM-FTX-SG27-SG29-SG30-SG34-SG39
SG30	- C	1	-	RFF
RFF	- M	1	-	Reference

Function:

To specify a reference.

e-SLOG 2.0			EN 16931		
Tag	Name	Format	St	Usage	Example
C506	REFERENCE		**M**		
1153	Reference code qualifier	an..3	**M**	ON = Order number (buyer) DESC:An identifier for an object on which the invoice line is based, given by the Seller. BT:Invoice line object identifier identification scheme identifier (BT-128-1)	ON
1154	Reference identifier	an..70	**C**		
1156	Document line identifier	an..6	**R**	BT:Referenced purchase order line reference(BT-132) DESC:An identifier for a referenced line within a purchase order, issued by the Buyer.	1

Segment Notes:

Segment number: 94

SG26	- R	9999999	-	LIN-PIA-IMD-QTY-ALI-DTM-FTX-SG27-SG29-SG30-SG34-SG39
SG30	- C	1	-	RFF
RFF	- M	1	-	Reference

Function:

To specify a reference.

e-SLOG 2.0			EN 16931		
Tag	Name	Format	St	Usage	Example
C506	REFERENCE		**M**		
1153	Reference code qualifier	an..3	**M**	AWQ = Accounting entry	AWQ
1154	Reference identifier	an..70	**R**	BT:Invoice line Buyer accounting reference (BT-133) DESC:A textual value that specifies where to book the relevant data into the Buyer's financial accounts.	ACC7654

Segment Notes:

Segment number: 95

SG26	- R	9999999	-	LIN-PIA-IMD-QTY-ALI-DTM-FTX-SG27-SG29-SG30-SG34-SG39
SG34	- R	1	-	TAX-MOA
TAX	- M	1	-	Duty/tax/fee details

Function:

To specify relevant duty/tax/fee information.

e-SLOG 2.0			EN 16931		
Tag	Name	Format	St	Usage	Example
5283	Duty or tax or fee function code qualifier	an..3	**M**	7 = Tax	7
C241	DUTY/TAX/FEE TYPE		**R**		
5153	Duty or tax or fee type name code	an..3	**R**	VAT = Value added tax	VAT
C533	DUTY/TAX/FEE ACCOUNT DETAIL		**N**		
5289	Duty or tax or fee account code	an..6	**N**	Not used	
5286	Duty or tax or fee assessment basis value	an..15	**C**		
C243	DUTY/TAX/FEE DETAIL		**C**		
5279	Duty or tax or fee rate code	an..7	**C**		
1131	Code list identification code	an..17	**C**		
3055	Code list responsible agency code	an..3	**C**		
5278	Duty or tax or fee rate	an..17	**R**	BT:Invoiced item VAT rate (BT-152) DESC:The VAT rate, represented as percentage that applies to the invoiced item.	25
5305	Duty or tax or fee category code	an..3	**R**	BT:Invoiced item VAT category code (BT-151) DESC:The VAT category code for the invoiced item. S = Standard rate Z = Zero rated goods E = Exempt from tax AE = VAT Reverse Charge K = VAT exempt for EEA intra-community supply of goods and services G = Free export item, tax not charged O = Services outside scope of tax L = Canary Islands general indirect tax M = Tax for production, services and importation in Ceuta and Melilla	S

Segment Notes:

Segment number: 96

SG26	- R	9999999	-	LIN-PIA-IMD-QTY-ALI-DTM-FTX-SG27-SG29-SG30-SG34-SG39
SG34	- R	1	-	TAX-MOA
MOA	- C	2	-	Monetary amount

Function:

To specify a monetary amount.

e-SLOG 2.0			EN 16931		
Tag	Name	Format	St	Usage	Example
C516	MONETARY AMOUNT		**M**		
5025	Monetary amount type code qualifier	an..3	**M**	125 = Taxable amount	125
5004	Monetary amount	n..35	**R**	BT:Invoice line VAT category taxable amount(NBT-032) DESC:Sum of all taxable amounts on line item level.	1000.00

Segment Notes:

Segment number: 97

SG26	- R	9999999	-	LIN-PIA-IMD-QTY-ALI-DTM-FTX-SG27-SG29-SG30-SG34-SG39
SG34	- R	1	-	TAX-MOA
MOA	- C	2	-	Monetary amount

Function:

To specify a monetary amount.

e-SLOG 2.0			EN 16931		
Tag	Name	Format	St	Usage	Example
C516	MONETARY AMOUNT		**M**		
5025	Monetary amount type code qualifier	an..3	**M**	124 = Tax amount	124
5004	Monetary amount	n..35	**R**	BT:Invoice line VAT category tax amount (NBT-033) DESC:The total VAT amount on line item level.	250.00

Segment Notes:

Segment number: 98

SG26	- R	9999999	-	LIN-PIA-IMD-QTY-ALI-DTM-FTX-SG27-SG29-SG30-SG34-SG39
SG39	- C	30	-	ALC-SG41-SG42
ALC	- M	1	-	Allowance or charge

Function:

To identify allowance or charge details.

e-SLOG 2.0			EN 16931		
Tag	Name	Format	St	Usage	Example
5463	Allowance or charge code qualifier	an..3	**M**	A = Allowance BT:INVOICE LINE ALLOWANCES(BG-27) DESC:A group of business terms providing information about allowances applicable to the individual Invoice line.	A
C552	ALLOWANCE/CHARGE INFORMATION		**C**		
1230	Allowance or charge identifier	an..35	**C**	BT:Invoice line allowance reason(BT-139) DESC:The reason for the Invoice line allowance, expressed as text.	Loyal customer
5189	Allowance or charge identification code	an..3	**C**	BT:Invoice line allowance reason code(BT-140) DESC:The reason for the Invoice line allowance, expressed as a code.	95

Segment Notes:

Segment number: 99

SG26	- R	9999999	-	LIN-PIA-IMD-QTY-ALI-DTM-FTX-SG27-SG29-SG30-SG34-SG39
SG39	- C	30	-	ALC-SG41-SG42
SG41	- C	1	-	PCD
PCD	- M	1	-	Percentage details

Function:

To specify percentage information.

e-SLOG 2.0			EN 16931		
Tag	Name	Format	St	Usage	Example
C501	PERCENTAGE DETAILS		**M**		
5245	Percentage type code qualifier	an..3	**M**	1 = Allowance	1
5482	Percentage	n..10	**R**	BT:Invoice line allowance percentage(BT-138) DESC:The percentage that may be used, in conjunction with the Invoice line allowance base amount, to calculate the Invoice line allowance amount.	10

Segment Notes:

Segment number: 100

SG26	- R	9999999	-	LIN-PIA-IMD-QTY-ALI-DTM-FTX-SG27-SG29-SG30-SG34-SG39
SG39	- C	30	-	ALC-SG41-SG42
SG42	- R	2	-	MOA
MOA	- M	1	-	Monetary amount

Function:

To specify a monetary amount.

e-SLOG 2.0			EN 16931		
Tag	Name	Format	St	Usage	Example
C516	MONETARY AMOUNT		**M**		
5025	Monetary amount type code qualifier	an..3	**M**	204 = Allowance amount	204
5004	Monetary amount	n..35	**R**	BT:Invoice line allowance amount(BT-136) DESC:The amount of an allowance, without VAT.	100.00

Segment Notes:

Segment number: 101

SG26	- R	9999999	-	LIN-PIA-IMD-QTY-ALI-DTM-FTX-SG27-SG29-SG30-SG34-SG39
SG39	- C	30	-	ALC-SG41-SG42
SG42	- C	2	-	MOA
MOA	- M	1	-	Monetary amount

Function:

To specify a monetary amount.

e-SLOG 2.0			EN 16931		
Tag	Name	Format	St	Usage	Example
C516	MONETARY AMOUNT		**M**		
5025	Monetary amount type code qualifier	an..3	**M**	25 = Charge/allowance basis	25
5004	Monetary amount	n..35	**R**	BT:Invoice line allowance base amount(BT-137) DESC:The base amount that may be used, in conjunction with the Invoice line allowance percentage, to calculate the Invoice line allowance amount.	1000.00

Segment Notes:

Segment number: 102

SG26	- R	9999999	-	LIN-PIA-IMD-QTY-ALI-DTM-FTX-SG27-SG29-SG30-SG34-SG39
SG39	- C	30	-	ALC-SG42
ALC	- M	1	-	Allowance or charge

Function:

To identify allowance or charge details.

e-SLOG 2.0			EN 16931		
Tag	Name	Format	St	Usage	Example
5463	Allowance or charge code qualifier	an..3	**M**	A = Allowance BT:INVOICE LINE ALLOWANCES(BG-27) DESC:A group of business terms providing information about allowances applicable to the individual Invoice line.	A

Segment Notes:

Segment number: 103

SG26	- R	9999999	-	LIN-PIA-IMD-QTY-ALI-DTM-FTX-SG27-SG29-SG30-SG34-SG39
SG39	- C	30	-	ALC-SG42
SG42	- C	1	-	MOA
MOA	- M	1	-	Monetary amount

Function:

To specify a monetary amount.

e-SLOG 2.0			EN 16931		
Tag	Name	Format	St	Usage	Example
C516	MONETARY AMOUNT		**M**		
5025	Monetary amount type code qualifier	an..3	**M**	509 = Unit allowance amount	509
5004	Monetary amount	n..35	**R**	BT:Item price discount(BT-147) DESC:The total discount subtracted from the Item gross price to calculate the Item net price.	0.1000

Segment Notes:

Segment number: 104

SG26	- R	9999999	-	LIN-PIA-IMD-QTY-ALI-DTM-FTX-SG27-SG29-SG30-SG34-SG39
SG39	- C	30	-	ALC-SG41-SG42
ALC	- M	1	-	Allowance or charge

Function:

To identify allowance or charge details.

e-SLOG 2.0			EN 16931		
Tag	Name	Format	St	Usage	Example
5463	Allowance or charge code qualifier	an..3	**M**	C = Charge BT:INVOICE LINE CHARGES(BG-28) DESC:A group of business terms providing information about charges and taxes other than VAT applicable to the individual Invoice line.	C
C552	ALLOWANCE/CHARGE INFORMATION		**C**		
1230	Allowance or charge identifier	an..35	**R**	BT:Invoice line charge reason(BT-144) DESC:The reason for the Invoice line charge, expressed as text.	Packaging
4471	Settlement means code	an..3	**C**		
1227	Calculation sequence code	an..3	**C**		
C214	SPECIAL SERVICES IDENTIFICATION		**C**		
7161	Special service description code	an..3	**R**	BT:Invoice line charge reason code(BT-145) DESC:The reason for the Invoice line charge, expressed as a code.	ABL

Segment Notes:

Segment number: 105

SG26	- R	9999999	-	LIN-PIA-IMD-QTY-ALI-DTM-FTX-SG27-SG29-SG30-SG34-SG39
SG39	- C	30	-	ALC-SG41-SG42
SG41	- C	1	-	PCD
PCD	- M	1	-	Percentage details

Function:

To specify percentage information.

e-SLOG 2.0			EN 16931		
Tag	Name	Format	St	Usage	Example
C501	PERCENTAGE DETAILS		**M**		
5245	Percentage type code qualifier	an..3	**M**	2 = Charge	2
5482	Percentage	n..10	**R**	BT:Invoice line charge percentage(BT-143) DESC:The percentage that may be used, in conjunction with the Invoice line charge base amount, to calculate the Invoice line charge amount.	10

Segment Notes:

Segment number: 106

SG26	- R	9999999	-	LIN-PIA-IMD-QTY-ALI-DTM-FTX-SG27-SG29-SG30-SG34-SG39
SG39	- C	30	-	ALC-SG41-SG42
SG42	- R	2	-	MOA
MOA	- M	1	-	Monetary amount

Function:

To specify a monetary amount.

e-SLOG 2.0			EN 16931		
Tag	Name	Format	St	Usage	Example
C516	MONETARY AMOUNT		**M**		
5025	Monetary amount type code qualifier	an..3	**M**	23 = Charge amount	23
5004	Monetary amount	n..35	**R**	BT:Invoice line charge amount(BT-141) DESC:The amount of a charge, without VAT.	100.00

Segment Notes:

Segment number: 107

SG26	- R	9999999	-	LIN-PIA-IMD-QTY-ALI-DTM-FTX-SG27-SG29-SG30-SG34-SG39
SG39	- C	30	-	ALC-SG41-SG42
SG42	- C	2	-	MOA
MOA	- M	1	-	Monetary amount

Function:

To specify a monetary amount.

e-SLOG 2.0			EN 16931		
Tag	Name	Format	St	Usage	Example
C516	MONETARY AMOUNT		**M**		
5025	Monetary amount type code qualifier	an..3	**M**	25 = Charge/allowance basis	25
5004	Monetary amount	n..35	**R**	BT:Invoice line charge base amount(BT-142) DESC:The base amount that may be used, in conjunction with the Invoice line charge percentage, to calculate the Invoice line charge amount.	1000.00

Segment Notes:

Segment number: 108

SG26	- C	9999999	-	LIN-PIA-IMD-QTY-ALI-DTM-FTX-SG27-SG29-SG30-SG34
LIN	- M	1	-	Line item

Function:

To identify a line item and configuration.

e-SLOG 2.0			EN 16931		
Tag	Name	Format	St	Usage	Example
1082	Line item identifier	an..6	**R**	BT:Invoice line identifier(BT-126) DESC:A unique identifier for the individual line within the Invoice.	2

Segment Notes:

Segment number: 109

SG26	- C	9999999	-	LIN-PIA-IMD-QTY-ALI-DTM-FTX-SG27-SG29-SG30-SG34
PIA	- C	1	-	Additional product id

Function:

To specify additional or substitutional item identification codes.

e-SLOG 2.0			EN 16931		
Tag	Name	Format	St	Usage	Example
4347	Product identifier code qualifier	an..3	**M**	5 = Product identification	5
C212	ITEM NUMBER IDENTIFICATION		**M**		
7140	Item identifier	an..35	**R**	BT:Item Seller's identifier(BT-155) DESC:An identifier, assigned by the Seller, for the item.	JB008
7143	Item type identification code	an..3	**R**	SA = Supplier's article number	SA

Segment Notes:

Segment number: 110

SG26	- C	9999999	-	LIN-PIA-IMD-QTY-ALI-DTM-FTX-SG27-SG29-SG30-SG34
IMD	- R	1	-	Item description

Function:

To describe an item in either an industry or free format.

e-SLOG 2.0			EN 16931		
Tag	Name	Format	St	Usage	Example
7077	Description format code	an..3	**R**	F = Free-form	F
C272	ITEM CHARACTERISTIC		**N**		
7081	Item characteristic code	an..3	**N**	Not used	
C273	ITEM DESCRIPTION		**R**		
7009	Item description code	an..17	**C**		
1131	Code list identification code	an..17	**C**		
3055	Code list responsible agency code	an..3	**C**		
7008	Item description	an..256	**R**	BT:Item name(BT-153) DESC:A name for an item.	Parker Pen

Segment Notes:

Segment number: 111

SG26	- C	9999999	- LIN-PIA-IMD-QTY-ALI-DTM-FTX-SG27-SG29-SG30-SG34
IMD	- C	1	- Item description

Function:

To describe an item in either an industry or free format.

e-SLOG 2.0			EN 16931		
Tag	Name	Format	St	Usage	Example
7077	Description format code	an..3	**R**	A = Free-form long description	A
C272	ITEM CHARACTERISTIC		**N**		
7081	Item characteristic code	an..3	**N**	Not used	
C273	ITEM DESCRIPTION		**R**		
7009	Item description code	an..17	**N**	Not used	
1131	Code list identification code	an..17	**N**	Not used	
3055	Code list responsible agency code	an..3	**N**	Not used	
7008	Item description	an..256	**R**	BT:Item description(BT-154) DESC:A description for an item.	Perker Pen, Black, model Sansa

Segment Notes:

Segment number: 112

SG26	- C	9999999	-	LIN-PIA-IMD-QTY-ALI-DTM-FTX-SG27-SG29-SG30-SG34
QTY	- R	1	-	Quantity

Function:

To specify a pertinent quantity.

e-SLOG 2.0			EN 16931		
Tag	Name	Format	St	Usage	Example
C186	QUANTITY DETAILS		**M**		
6063	Quantity type code qualifier	an..3	**M**	47 = Invoiced quantity	47
6060	Quantity	an..35	**R**	BT:Invoiced quantity(BT-129) DESC:The quantity of items (goods or services) that is charged in the Invoice line.	100
6411	Measurement unit code	an..8	**R**	BT:Invoiced quantity unit of measure(BT-130) DESC:The unit of measure that applies to the invoiced quantity. Usage of Rec 20 with Rec 21 extensions is allowed as defined in usage note 2.a) of Rec 20	C62

Segment Notes:

Segment number: 113

SG26	- C	9999999	-	LIN-PIA-IMD-QTY-ALI-DTM-FTX-SG27-SG29-SG30-SG34
ALI	- C	1	-	Additional information

Function:

To indicate that special conditions due to the origin, customs preference, fiscal or commercial factors are applicable.

e-SLOG 2.0			EN 16931		
Tag	Name	Format	St	Usage	Example
3239	Country of origin name code	an..3	**R**	BT:Item country of origin(BT-159) DESC:The code identifying the country from which the item originates.	NL

Segment Notes:

Segment number: 114

SG26	- C	9999999	- LIN-PIA-IMD-QTY-ALI-DTM-FTX-SG27-SG29-SG30-SG34
DTM	- C	1	- Date/time/period

Function:

To specify date, and/or time, or period.

e-SLOG 2.0			EN 16931		
Tag	Name	Format	St	Usage	Example
C507	DATE/TIME/PERIOD		**M**		
2005	Date or time or period function code qualifier	an..3	**M**	167 = Charge period start date BT:INVOICE LINE PERIOD(BG-26) DESC:A group of business terms providing information about the period relevant for the Invoice line.	167
2380	Date or time or period value	an..35	**R**	BT:Invoice line period start date(BT-134) DESC:The date when the Invoice period for this Invoice line starts.	2013-03-10

Segment Notes:

Segment number: 115

SG26	- C	9999999	- LIN-PIA-IMD-QTY-ALI-DTM-FTX-SG27-SG29-SG30-SG34
DTM	- C	1	- Date/time/period

Function:

To specify date, and/or time, or period.

e-SLOG 2.0			EN 16931		
Tag	Name	Format	St	Usage	Example
C507	DATE/TIME/PERIOD		**M**		
2005	Date or time or period function code qualifier	an..3	**M**	168 = Charge period end date BT:INVOICE LINE PERIOD(BG-26) DESC:A group of business terms providing information about the period relevant for the Invoice line.	168
2380	Date or time or period value	an..35	**R**	BT:Invoice line period end date(BT-135) DESC:The date when the Invoice period for this Invoice line ends.	2013-04-10

Segment Notes:

Segment number: 116

SG26	- C	9999999	- LIN-PIA-IMD-QTY-ALI-DTM-FTX-SG27-SG29-SG30-SG34
FTX	- C	1	- Free text

Function:

To provide free form or coded text information.

e-SLOG 2.0			EN 16931		
Tag	Name	Format	St	Usage	Example
4451	Text subject code qualifier	an..3	**M**	ACB = Additional information	ACB
4453	Free text function code	an..3	**N**	Not used	
C107	TEXT REFERENCE		**N**		
4441	Free text value code	an..17	**N**	Not used	
C108	TEXT LITERAL		**R**		
4440	Free text value	an..512	**M**	BT:Invoice line noter(BT-127) DESC:A textual note that gives unstructured information that is relevant to the Invoice line.	Second line

Segment Notes:

Segment number: 117

SG26	- C	9999999	-	LIN-PIA-IMD-QTY-ALI-DTM-FTX-SG27-SG29-SG30-SG34
SG27	- R	1	-	MOA
MOA	- M	1	-	Monetary amount

Function:

To specify a monetary amount.

e-SLOG 2.0			EN 16931		
Tag	Name	Format	St	Usage	Example
C516	MONETARY AMOUNT		**M**		
5025	Monetary amount type code qualifier	an..3	**M**	203 = Line item amount	203
5004	Monetary amount	n..35	**R**	BT:Invoice line net amount(BT-131) DESC:The total amount of the Invoice line.	500.00

Segment Notes:

Segment number: 118

SG26	- C	9999999	-	LIN-PIA-IMD-QTY-ALI-DTM-FTX-SG27-SG29-SG30-SG34
SG27	- R	1	-	MOA
MOA	- M	1	-	Monetary amount

Function:

To specify a monetary amount.

e-SLOG 2.0			EN 16931		
Tag	Name	Format	St	Usage	Example
C516	MONETARY AMOUNT		**M**		
5025	Monetary amount type code qualifier	an..3	**M**	38 = Invoice item amount	38
5004	Monetary amount	n..35	**R**	BT:Invoice line net amount including VAT (NBT-100) DESC:The total amount of the Invoice line including VAT.	625.00

Segment Notes:

Segment number: 119

SG26	- C	9999999	-	LIN-PIA-IMD-QTY-ALI-DTM-FTX-SG27-SG29-SG30-SG34
SG29	- R	1	-	PRI
PRI	- M	1	-	Price details

Function:

To specify price information.

e-SLOG 2.0			EN 16931		
Tag	Name	Format	St	Usage	Example
C509	PRICE INFORMATION		**R**		
5125	Price code qualifier	an..3	**M**	AAA = Calculation net BT:PRICE DETAILS(BG-29) DESC:A group of business terms providing information about the price applied for the goods and services invoiced on the Invoice line.	AAA
5118	Price amount	n..15	**R**	BT:Item net price(BT-146) DESC:The price of an item, exclusive of VAT, after subtracting item price discount.	5.0000

Segment Notes:

Segment number: 120

SG26	- C	9999999	-	LIN-PIA-IMD-QTY-ALI-DTM-FTX-SG27-SG29-SG30-SG34
SG30	- C	1	-	RFF
RFF	- M	1	-	Reference

Function:

To specify a reference.

e-SLOG 2.0			EN 16931		
Tag	Name	Format	St	Usage	Example
C506	REFERENCE		**M**		
1153	Reference code qualifier	an..3	**M**	AVE = Metering point DESC:An identifier for an object on which the invoice line is based, given by the Seller. BT:Invoice line object identifier identification scheme identifier (BT-128-1)	AVE
1154	Reference identifier	an..70	**R**	BT:Invoice line object identifier(BT-128) DESC:An identifier for an object on which the invoice line is based, given by the Seller.	Object 2

Segment Notes:

Segment number: 121

SG26	- C	9999999	-	LIN-PIA-IMD-QTY-ALI-DTM-FTX-SG27-SG29-SG30-SG34
SG30	- C	1	-	RFF
RFF	- M	1	-	Reference

Function:

To specify a reference.

e-SLOG 2.0			EN 16931		
Tag	Name	Format	St	Usage	Example
C506	REFERENCE		**M**		
1153	Reference code qualifier	an..3	**M**	ON = Order number (buyer) DESC:An identifier for an object on which the invoice line is based, given by the Seller. BT:Invoice line object identifier identification scheme identifier (BT-128-1)	ON
1154	Reference identifier	an..70	**C**		
1156	Document line identifier	an..6	**R**	BT:Referenced purchase order line reference(BT-132) DESC:An identifier for a referenced line within a purchase order, issued by the Buyer.	2

Segment Notes:

Segment number: 122

SG26	- C	9999999	-	LIN-PIA-IMD-QTY-ALI-DTM-FTX-SG27-SG29-SG30-SG34
SG30	- C	1	-	RFF
RFF	- M	1	-	Reference

Function:

To specify a reference.

e-SLOG 2.0			EN 16931		
Tag	Name	Format	St	Usage	Example
C506	REFERENCE		**M**		
1153	Reference code qualifier	an..3	**M**	AWQ = Accounting entry	AWQ
1154	Reference identifier	an..70	**R**	BT:Invoice line Buyer accounting reference (BT-133) DESC:A textual value that specifies where to book the relevant data into the Buyer's financial accounts.	ACC7654

Segment Notes:

Segment number: 123

SG26	- C	9999999	-	LIN-PIA-IMD-QTY-ALI-DTM-FTX-SG27-SG29-SG30-SG34
SG34	- R	1	-	TAX-MOA
TAX	- M	1	-	Duty/tax/fee details

Function:

To specify relevant duty/tax/fee information.

e-SLOG 2.0			EN 16931		
Tag	Name	Format	St	Usage	Example
5283	Duty or tax or fee function code qualifier	an..3	**M**	7 = Tax	7
C241	DUTY/TAX/FEE TYPE		**R**		
5153	Duty or tax or fee type name code	an..3	**R**	VAT = Value added tax	VAT
C533	DUTY/TAX/FEE ACCOUNT DETAIL		**N**		
5289	Duty or tax or fee account code	an..6	**N**	Not used	
5286	Duty or tax or fee assessment basis value	an..15	**C**		
C243	DUTY/TAX/FEE DETAIL		**C**		
5279	Duty or tax or fee rate code	an..7	**C**		
1131	Code list identification code	an..17	**C**		
3055	Code list responsible agency code	an..3	**C**		
5278	Duty or tax or fee rate	an..17	**R**	BT:Invoiced item VAT rate (BT-152) DESC:The VAT rate, represented as percentage that applies to the invoiced item.	25
5305	Duty or tax or fee category code	an..3	**R**	BT:Invoiced item VAT category code (BT-151) DESC:The VAT category code for the invoiced item. S = Standard rate Z = Zero rated goods E = Exempt from tax AE = VAT Reverse Charge K = VAT exempt for EEA intra-community supply of goods and services G = Free export item, tax not charged O = Services outside scope of tax L = Canary Islands general indirect tax M = Tax for production, services and importation in Ceuta and Melilla	S

Segment Notes:

Segment number: 124

SG26	- C	9999999	-	LIN-PIA-IMD-QTY-ALI-DTM-FTX-SG27-SG29-SG30-SG34
SG34	- R	1	-	TAX-MOA
MOA	- C	2	-	Monetary amount

Function:

To specify a monetary amount.

e-SLOG 2.0			EN 16931		
Tag	Name	Format	St	Usage	Example
C516	MONETARY AMOUNT		**M**		
5025	Monetary amount type code qualifier	an..3	**M**	125 = Taxable amount	125
5004	Monetary amount	n..35	**R**	BT:Invoice line VAT base amount(NBT-032) DESC:Invoice line VAT base amount.	500.00

Segment Notes:

Segment number: 125

SG26	- C	9999999	-	LIN-PIA-IMD-QTY-ALI-DTM-FTX-SG27-SG29-SG30-SG34
SG34	- R	1	-	TAX-MOA
MOA	- C	2	-	Monetary amount

Function:

To specify a monetary amount.

e-SLOG 2.0			EN 16931		
Tag	Name	Format	St	Usage	Example
C516	MONETARY AMOUNT		**M**		
5025	Monetary amount type code qualifier	an..3	**M**	124 = Tax amount	124
5004	Monetary amount	n..35	**R**	BT:Invoice line VAT amount (NBT-033) DESC:Invoice line VAT amount.	125.00

Segment Notes:

Segment number: 126

SG26	- C	9999999	-	LIN-PIA-IMD-QTY-SG27-SG29-SG34
LIN	- M	1	-	Line item

Function:

To identify a line item and configuration.

e-SLOG 2.0			EN 16931		
Tag	Name	Format	St	Usage	Example
1082	Line item identifier	an..6	**R**	BT:Invoice line identifier(BT-126) DESC:A unique identifier for the individual line within the Invoice.	3

Segment Notes:

Segment number: 127

SG26	- C	9999999	- LIN-PIA-IMD-QTY-SG27-SG29-SG34
PIA	- C	1	- Additional product id

Function:

To specify additional or substitutional item identification codes.

e-SLOG 2.0			EN 16931		
Tag	Name	Format	St	Usage	Example
4347	Product identifier code qualifier	an..3	**M**	5 = Product identification	5
C212	ITEM NUMBER IDENTIFICATION		**M**		
7140	Item identifier	an..35	**R**	BT:Item Seller's identifier(BT-155) DESC:An identifier, assigned by the Seller, for the item.	JB009
7143	Item type identification code	an..3	**R**	SA = Supplier's article number	SA

Segment Notes:

Segment number: 128

SG26	- C	9999999	-	LIN-PIA-IMD-QTY-SG27-SG29-SG34
IMD	- R	1	-	Item description

Function:

To describe an item in either an industry or free format.

e-SLOG 2.0			EN 16931		
Tag	Name	Format	St	Usage	Example
7077	Description format code	an..3	**R**	F = Free-form	F
C272	ITEM CHARACTERISTIC		**N**		
7081	Item characteristic code	an..3	**N**	Not used	
C273	ITEM DESCRIPTION		**R**		
7009	Item description code	an..17	**C**		
1131	Code list identification code	an..17	**C**		
3055	Code list responsible agency code	an..3	**C**		
7008	Item description	an..256	**R**	BT:Item name(BT-153) DESC:A name for an item.	American Cookies

Segment Notes:

Segment number: 129

SG26	- C	9999999	- LIN-PIA-IMD-QTY-SG27-SG29-SG34
QTY	- R	1	- Quantity

Function:

To specify a pertinent quantity.

e-SLOG 2.0			EN 16931		
Tag	Name	Format	St	Usage	Example
C186	QUANTITY DETAILS		**M**		
6063	Quantity type code qualifier	an..3	**M**	47 = Invoiced quantity	47
6060	Quantity	an..35	**R**	BT:Invoiced quantity(BT-129) DESC:The quantity of items (goods or services) that is charged in the Invoice line.	500
6411	Measurement unit code	an..8	**R**	BT:Invoiced quantity unit of measure(BT-130) DESC:The unit of measure that applies to the invoiced quantity. Usage of Rec 20 with Rec 21 extensions is allowed as defined in usage note 2.a) of Rec 20	C62

Segment Notes:

Segment number: 130

SG26	- C	9999999	-	LIN-PIA-IMD-QTY-SG27-SG29-SG34
SG27	- R	99	-	MOA
MOA	- M	1	-	Monetary amount

Function:

To specify a monetary amount.

e-SLOG 2.0			EN 16931		
Tag	Name	Format	St	Usage	Example
C516	MONETARY AMOUNT		**M**		
5025	Monetary amount type code qualifier	an..3	**M**	203 = Line item amount	203
5004	Monetary amount	n..35	**M**	BT:Invoice line net amount(BT-131) DESC:The total amount of the Invoice line.	2500.00

Segment Notes:

Segment number: 131

SG26	- C	9999999	-	LIN-PIA-IMD-QTY-SG27-SG29-SG34
SG27	- R	1	-	MOA
MOA	- M	1	-	Monetary amount

Function:

To specify a monetary amount.

e-SLOG 2.0			EN 16931		
Tag	Name	Format	St	Usage	Example
C516	MONETARY AMOUNT		**M**		
5025	Monetary amount type code qualifier	an..3	**M**	38 = Invoice item amount	38
5004	Monetary amount	n..35	**R**	BT:Invoice line net amount including VAT (NBT-100) DESC:The total amount of the Invoice line including VAT.	2800.00

Segment Notes:

Segment number: 132

SG26	- C	9999999	-	LIN-PIA-IMD-QTY-SG27-SG29-SG34
SG29	- R	1	-	PRI
PRI	- M	1	-	Price details

Function:

To specify price information.

e-SLOG 2.0			EN 16931		
Tag	Name	Format	St	Usage	Example
C509	PRICE INFORMATION		**R**		
5125	Price code qualifier	an..3	**M**	AAA = Calculation net BT:PRICE DETAILS(BG-29) DESC:A group of business terms providing information about the price applied for the goods and services invoiced on the Invoice line.	AAA
5118	Price amount	n..15	**R**	BT:Item net price(BT-146) DESC:The price of an item, exclusive of VAT, after subtracting item price discount.	5.0000

Segment Notes:

Segment number: 133

SG26	- C	9999999	-	LIN-PIA-IMD-QTY-SG27-SG29-SG34
SG34	- R	1	-	TAX-MOA
TAX	- M	1	-	Duty/tax/fee details

Function:

To specify relevant duty/tax/fee information.

e-SLOG 2.0			EN 16931		
Tag	Name	Format	St	Usage	Example
5283	Duty or tax or fee function code qualifier	an..3	**M**	7 = Tax	7
C241	DUTY/TAX/FEE TYPE		**R**		
5153	Duty or tax or fee type name code	an..3	**R**	VAT = Value added tax	VAT
C533	DUTY/TAX/FEE ACCOUNT DETAIL		**N**		
5289	Duty or tax or fee account code	an..6	**N**	Not used	
5286	Duty or tax or fee assessment basis value	an..15	**C**		
C243	DUTY/TAX/FEE DETAIL		**C**		
5279	Duty or tax or fee rate code	an..7	**C**		
1131	Code list identification code	an..17	**C**		
3055	Code list responsible agency code	an..3	**C**		
5278	Duty or tax or fee rate	an..17	**R**	BT:Invoiced item VAT rate (BT-152) DESC:The VAT rate, represented as percentage that applies to the invoiced item.	12
5305	Duty or tax or fee category code	an..3	**R**	BT:Invoiced item VAT category code (BT-151) DESC:The VAT category code for the invoiced item. S = Standard rate Z = Zero rated goods E = Exempt from tax AE = VAT Reverse Charge K = VAT exempt for EEA intra-community supply of goods and services G = Free export item, tax not charged O = Services outside scope of tax L = Canary Islands general indirect tax M = Tax for production, services and importation in Ceuta and Melilla	S

Segment Notes:

Segment number: 134

SG26	- C	9999999	-	LIN-PIA-IMD-QTY-SG27-SG29-SG34
SG34	- R	1	-	TAX-MOA
MOA	- C	2	-	Monetary amount

Function:

To specify a monetary amount.

e-SLOG 2.0			EN 16931		
Tag	Name	Format	St	Usage	Example
C516	MONETARY AMOUNT		**M**		
5025	Monetary amount type code qualifier	an..3	**M**	125 = Taxable amount	125
5004	Monetary amount	n..35	**R**	BT:Invoice line VAT base amount(NBT-032) DESC:Invoice line VAT base amount.	2500.00

Segment Notes:

Segment number: 135

SG26	- C	9999999	-	LIN-PIA-IMD-QTY-SG27-SG29-SG34
SG34	- R	1	-	TAX-MOA
MOA	- C	2	-	Monetary amount

Function:

To specify a monetary amount.

e-SLOG 2.0			EN 16931		
Tag	Name	Format	St	Usage	Example
C516	MONETARY AMOUNT		**M**		
5025	Monetary amount type code qualifier	an..3	**M**	124 = Tax amount	124
5004	Monetary amount	n..35	**R**	BT:Invoice line VAT amount (NBT-033) DESC:Invoice line VAT amount.	300.00

Segment Notes:

Segment number: 136

UNS	- C	1 - Section control			
Function: To separate header, detail and summary sections of a message. Notes: To be used by message designers only when required to avoid ambiguities.					
e-SLOG 2.0			EN 16931		
Tag	Name	Format	St	Usage	Example
0081	Section identification	a1	**M**		D
Segment Notes: BT:DOCUMENT TOTALS(BG-22) DESC:A group of business terms providing the monetary totals for the Invoice.					

Segment number: 137

SG50	- M	1 -	MOA
MOA	- M	1 -	Monetary amount

Function:

To specify a monetary amount.

e-SLOG 2.0			EN 16931		
Tag	Name	Format	St	Usage	Example
C516	MONETARY AMOUNT		**M**		
5025	Monetary amount type code qualifier	an..3	**M**	79 = Total line items amount	79
5004	Monetary amount	n..35	**R**	BT:Sum of Invoice line net amount(BT-106) DESC:Sum of all Invoice line net amounts in the Invoice.	4000.00

Segment Notes:

Segment number: 138

SG50	- M	1 -	MOA
MOA	- M	1 -	Monetary amount

Function:

To specify a monetary amount.

e-SLOG 2.0			EN 16931		
Tag	Name	Format	St	Usage	Example
C516	MONETARY AMOUNT		**M**		
5025	Monetary amount type code qualifier	an..3	**M**	389 = Amount excluding Value Added Tax (VAT)	389
5004	Monetary amount	n..35	**R**	BT:Invoice total amount without VAT(BT-109) DESC:The total amount of the Invoice without VAT.	4000.00

Segment Notes:

Segment number: 139

SG50	- M	1 -	MOA
MOA	- M	1 -	Monetary amount

Function:

To specify a monetary amount.

e-SLOG 2.0			EN 16931		
Tag	Name	Format	St	Usage	Example
C516	MONETARY AMOUNT		**M**		
5025	Monetary amount type code qualifier	an..3	**M**	388 = Total amount including Value Added Tax (VAT)	388
5004	Monetary amount	n..35	**R**	BT:Invoice total amount with VAT(BT-112) DESC:The total amount of the Invoice with VAT.	4675.00

Segment Notes:

Segment number: 140

SG50	- M	1 -	MOA
MOA	- M	1 -	Monetary amount

Function:

To specify a monetary amount.

e-SLOG 2.0			EN 16931		
Tag	Name	Format	St	Usage	Example
C516	MONETARY AMOUNT		**M**		
5025	Monetary amount type code qualifier	an..3	**M**	9 = Amount due/amount payable	9
5004	Monetary amount	n..35	**R**	BT:Amount due for payment(BT-115) DESC:The outstanding amount that is requested to be paid.	2337.50

Segment Notes:

Segment number: 141

SG50	- C	1 -	MOA
MOA	- M	1 -	Monetary amount

Function:

To specify a monetary amount.

e-SLOG 2.0			EN 16931		
Tag	Name	Format	St	Usage	Example
C516	MONETARY AMOUNT		**M**		
5025	Monetary amount type code qualifier	an..3	**M**	260 = Total allowances	260
5004	Monetary amount	n..35	**R**	BT:Sum of allowances on document level(BT-107) DESC:Sum of all allowances on document level in the Invoice.	150.00

Segment Notes:

Segment number: 142

SG50	- C	1	- MOA
MOA	- M	1	- Monetary amount

Function:

To specify a monetary amount.

e-SLOG 2.0			EN 16931		
Tag	Name	Format	St	Usage	Example
C516	MONETARY AMOUNT		**M**		
5025	Monetary amount type code qualifier	an..3	**M**	259 = Total charges	259
5004	Monetary amount	n..35	**R**	BT:Sum of charges on document level(BT-108) DESC:Sum of all charges on document level in the Invoice.	150.00

Segment Notes:

Segment number: 143

SG50	- C	1 -	MOA
MOA	- M	1 -	Monetary amount

Function:

To specify a monetary amount.

e-SLOG 2.0			EN 16931		
Tag	Name	Format	St	Usage	Example
C516	MONETARY AMOUNT		**M**		
5025	Monetary amount type code qualifier	an..3	**M**	2 = VAT, 2nd value	2
5004	Monetary amount	n..35	**R**	BT:Invoice total VAT amount in accounting currency (BT-111) DESC:The VAT total amount expressed in the accounting currency accepted or required in the country of the Seller.	628.62

Segment Notes:

Segment number: 144

SG50	- C	1	- MOA
MOA	- M	1	- Monetary amount

Function:

To specify a monetary amount.

e-SLOG 2.0			EN 16931		
Tag	Name	Format	St	Usage	Example
C516	MONETARY AMOUNT		**M**		
5025	Monetary amount type code qualifier	an..3	**M**	113 = Prepaid amount	113
5004	Monetary amount	n..35	**R**	BT:Paid amount (BT-113) DESC:The sum of amounts which have been paid in advance.	2337.50

Segment Notes:

Segment number: 145

SG50	- C	1 -	MOA
MOA	- M	1 -	Monetary amount

Function:

To specify a monetary amount.

e-SLOG 2.0			EN 16931		
Tag	Name	Format	St	Usage	Example
C516	MONETARY AMOUNT		**M**		
5025	Monetary amount type code qualifier	an..3	**M**	366 = Rounding amount	366
5004	Monetary amount	n..35	**R**	BT:Rounding amount (BT-114) DESC:The amount to be added to the invoice total to round the amount to be paid.	0

Segment Notes:

Segment number: 146

SG50	- C	1 -	MOA
MOA	- M	1 -	Monetary amount

Function:

To specify a monetary amount.

e-SLOG 2.0			EN 16931		
Tag	Name	Format	St	Usage	Example
C516	MONETARY AMOUNT		**M**		
5025	Monetary amount type code qualifier	an..3	**M**	176 = Message total duty/tax/fee amount	176
5004	Monetary amount	n..35	**R**	BT:Invoice total VAT amount (BT-110) DESC:The total VAT amount for the Invoice.	675.00

Segment Notes:

Segment number: 147

SG52	- R	10 -	TAX-MOA
TAX	- M	1 -	Duty/tax/fee details

Function:

To specify relevant duty/tax/fee information.

e-SLOG 2.0			EN 16931		
Tag	Name	Format	St	Usage	Example
5283	Duty or tax or fee function code qualifier	an..3	**M**	7 = Tax	7
C241	DUTY/TAX/FEE TYPE		**C**		
5153	Duty or tax or fee type name code	an..3	**C**	VAT = Value added tax	VAT
C533	DUTY/TAX/FEE ACCOUNT DETAIL		**N**		
5289	Duty or tax or fee account code	an..6	**N**	Not used	
5286	Duty or tax or fee assessment basis value	an..15	**N**	Not used	
C243	DUTY/TAX/FEE DETAIL		**C**		
5279	Duty or tax or fee rate code	an..7	**N**	Not used	
1131	Code list identification code	an..17	**N**	Not used	
3055	Code list responsible agency code	an..3	**N**	Not used	
5278	Duty or tax or fee rate	an..17	**R**	BT:VAT category rate(BT-119) DESC:The VAT rate, represented as percentage that applies for the relevant VAT category.	25
5305	Duty or tax or fee category code	an..3	**R**	BT:VAT category code(BT-118) DESC:Coded identification of a VAT category. S = Standard rate Z = Zero rated goods E = Exempt from tax AE = VAT Reverse Charge K = VAT exempt for EEA intra-community supply of goods and services G = Free export item, tax not charged O = Services outside scope of tax L = Canary Islands general indirect tax M = Tax for production, services and importation in Ceuta and Melilla	S

Segment Notes:

Segment number: 148

SG52	- R	10 -	TAX-MOA
MOA	- R	1 -	Monetary amount

Function:

To specify a monetary amount.

e-SLOG 2.0			EN 16931		
Tag	Name	Format	St	Usage	Example
C516	MONETARY AMOUNT		**M**		
5025	Monetary amount type code qualifier	an..3	**M**	125 = Taxable amount	125
5004	Monetary amount	n..35	**M**	BT:VAT category taxable amount(BT-116) DESC:Sum of all taxable amounts subject to a specific VAT category code and VAT category rate (if the VAT category rate is applicable).	1500.00

Segment Notes:

Segment number: 149

SG52	- R	10 -	TAX-MOA
MOA	- R	1 -	Monetary amount

Function:

To specify a monetary amount.

e-SLOG 2.0			EN 16931		
Tag	Name	Format	St	Usage	Example
C516	MONETARY AMOUNT		**M**		
5025	Monetary amount type code qualifier	an..3	**M**	124 = Tax amount	124
5004	Monetary amount	n..35	**M**	BT:VAT category tax amount(BT-117) DESC:The total VAT amount for a given VAT category.	375.00

Segment Notes:

Segment number: 150

SG52	- R	10 -	TAX-MOA
TAX	- M	1 -	Duty/tax/fee details

Function:

To specify relevant duty/tax/fee information.

e-SLOG 2.0			EN 16931		
Tag	Name	Format	St	Usage	Example
5283	Duty or tax or fee function code qualifier	an..3	**M**	7 = Tax	7
C241	DUTY/TAX/FEE TYPE		**C**		
5153	Duty or tax or fee type name code	an..3	**C**	VAT = Value added tax	VAT
C533	DUTY/TAX/FEE ACCOUNT DETAIL		**N**		
5289	Duty or tax or fee account code	an..6	**N**	Not used	
5286	Duty or tax or fee assessment basis value	an..15	**N**	Not used	
C243	DUTY/TAX/FEE DETAIL		**C**		
5279	Duty or tax or fee rate code	an..7	**N**	Not used	
1131	Code list identification code	an..17	**N**	Not used	
3055	Code list responsible agency code	an..3	**N**	Not used	
5278	Duty or tax or fee rate	an..17	**R**	BT:VAT category rate(BT-119) DESC:The VAT rate, represented as percentage that applies for the relevant VAT category.	12
5305	Duty or tax or fee category code	an..3	**R**	BT:VAT category code(BT-118) DESC:Coded identification of a VAT category. S = Standard rate Z = Zero rated goods E = Exempt from tax AE = VAT Reverse Charge K = VAT exempt for EEA intra-community supply of goods and services G = Free export item, tax not charged O = Services outside scope of tax L = Canary Islands general indirect tax M = Tax for production, services and importation in Ceuta and Melilla	S

Segment Notes:

Segment number: 151

SG52	- R	10 -	TAX-MOA
MOA	- R	1 -	Monetary amount

Function:

To specify a monetary amount.

e-SLOG 2.0			EN 16931		
Tag	Name	Format	St	Usage	Example
C516	MONETARY AMOUNT		**M**		
5025	Monetary amount type code qualifier	an..3	**M**	125 = Taxable amount	125
5004	Monetary amount	n..35	**R**	BT:VAT category taxable amount(BT-116) DESC:Sum of all taxable amounts subject to a specific VAT category code and VAT category rate (if the VAT category rate is applicable).	2500.00

Segment Notes:

Segment number: 152

SG52	- R	10 -	TAX-MOA
MOA	- R	1 -	Monetary amount

Function:

To specify a monetary amount.

e-SLOG 2.0			EN 16931		
Tag	Name	Format	St	Usage	Example
C516	MONETARY AMOUNT		**M**		
5025	Monetary amount type code qualifier	an..3	**M**	124 = Tax amount	124
5004	Monetary amount	n..35	**R**	BT:VAT category tax amount(BT-117) DESC:The total VAT amount for a given VAT category.	300.00

Segment Notes:

Segment number: 153

UNT - C 1 - Message trailer					
Function: To end and check the completeness of a message. Notes: 1. 0062, the value shall be identical to the value in 0062 in the corresponding UNH segment.					
e-SLOG 2.0			EN 16931		
Tag	Name	Format	St	Usage	Example
0074	Number of segments in a message	n..10	**M**		151
0062	Message reference number	an..14	**M**		TOSL110
Segment Notes:					

7 Consolidated invoice

A consolidated invoice means that the invoice is linked to multiple delivery locations and / or multiple orders and / or multiple deliveries. Standard EN 16931-1 specifies that the one invoice can only relate to one delivery and one order. In Slovenia, the so-called consolidated invoice takes into account different relationships. The rules and constraints for supporting consolidated invoices are described in *e-SLOG 2.0 Electronic invoice - Part 1: General instructions*, chapter 7.2.5.

General requirements for the preparation of consolidated invoices:

- the account type (BT-3) value for consolidated invoices is 385 (EDIFACT standard, Consolidated invoice),
- if the supplies relate to a period of several days, the BT-72 (Actual delivery date) includes the delivery note data (Delivery number + delivery date + delivery date),
- the date of the order can be entered.

Two methods of consolidated invoice are supported:

- the data of deliveries and orders at the level of the invoice header,
- the data of deliveries and orders at the level of the invoice line item.

The issuer can choose one of the supported methods or a combination of both (for example, in the case of one order and multiple deliveries, the order data can be written in the invoice header, and the supply data is written on the invoice line items).

7.1 The delivery and order data at the level of the invoice header

This method is appropriate in the case where the invoice items refer to the same (one) location, and items are difficult to link to individual orders (if case of multiple orders).

- In case the multiple deliveries are indicated on the header of the invoice, BT-16 (Despatch advice reference) is repeated several times.
- In case the multiple orders are indicated on the header of the invoice, BT-13 (Purchase order reference) is repeated several times .

An example for multiple deliveries:

```
<G_SG1>
      <S_RFF>
          <C_C506>
              <D_1153>AAK</D_1153>
              <D_1154>5433</D_1154>
          </C_C506>
      </S_RFF>
      <!--delivery note date-->
      <S_DTM>
          <C_C507>
              <D_2005>171</D_2005>
              <D_2380>2018-03-10</D_2380>
          </C_C507>
      </S_DTM>
      <!-- delivery date -->
      <S_DTM>
          <C_C507>
              <D_2005>35</D_2005>
```

```
                <D_2380>2018-03-10</D_2380>
            </C_C507>
        </S_DTM>
    </G_SG1>
    <G_SG1>
        <S_RFF>
            <C_C506>
                <D_1153>AAK</D_1153>
                <D_1154>3345</D_1154>
            </C_C506>
        </S_RFF>
        <!--delivery note date-->
        <S_DTM>
            <C_C507>
                <D_2005>171</D_2005>
                <D_2380>2018-03-11</D_2380>
            </C_C507>
        </S_DTM>
        <!-- delivery date -->
        <S_DTM>
            <C_C507>
                <D_2005>35</D_2005>
                <D_2380>2018-03-11</D_2380>
            </C_C507>
        </S_DTM>

    </G_SG1>
    <G_SG1>
        <S_RFF>
            <C_C506>
                <D_1153>AAK</D_1153>
                <D_1154>4522</D_1154>
            </C_C506>
        </S_RFF>
        <!--delivery note date-->
        <S_DTM>
            <C_C507>
                <D_2005>171</D_2005>
                <D_2380>2018-03-12</D_2380>
            </C_C507>
        </S_DTM>
        <!-- delivery date -->
        <S_DTM>
            <C_C507>
                <D_2005>35</D_2005>
                <D_2380>2018-03-12</D_2380>
            </C_C507>
        </S_DTM>
    </G_SG1>
```

An example for multiple orders:

```
<G_SG1>
        <S_RFF>
            <C_C506>
                <D_1153>ON</D_1153>
                <D_1154>511433</D_1154>
            </C_C506>
        </S_RFF>
   <!--order date-->
          <S_DTM>
       <C_C507>
                <D_2005>171</D_2005>
                <D_2380>2018-03-10</D_2380>
       </C_C507>
          </S_DTM>

    </G_SG1>
    <G_SG1>
```

```
            <S_RFF>
                <C_C506>
                    <D_1153>ON</D_1153>
                    <D_1154>332345</D_1154>
                </C_C506>
            </S_RFF>
        <!--order date-->
               <S_DTM>
            <C_C507>
                    <D_2005>171</D_2005>
                    <D_2380>2018-03-11</D_2380>
            </C_C507>
               </S_DTM>

         </G_SG1>
         <G_SG1>
            <S_RFF>
                <C_C506>
                    <D_1153>ON</D_1153>
                    <D_1154>454422</D_1154>
                </C_C506>
            </S_RFF>
        <!--order date-->
               <S_DTM>
            <C_C507>
                    <D_2005>171</D_2005>
                    <D_2380>2018-03-12</D_2380>
            </C_C507>
               </S_DTM>
         </G_SG1>
```

The listing of multiple locations in the invoice header is possible, but the use is not advisable because it makes it difficult to make a transparent connection between the number of supplies, orders and locations of delivery. If it is still necessary to record several different delivery locations in the invoice header, they can be indicated by repeating DELIVER TO ADDRESS (BG-15). Otherwise, it is recommended to use the method for orders, deliveries and delivery locations at the level of the invoice line item.

An example of two delivery locations in the invoice header:

```
<G_SG2>
            <S_NAD>
                <D_3035>DP</D_3035>
                <C_C082>
                    <D_3039>579000436070</D_3039>
                    <D_1131>0088</D_1131>
                </C_C082>
                <C_C080>
                    <D_3036>Logistic service ltd</D_3036>
                </C_C080>
                <C_C059>
                    <D_3042>Delivery street</D_3042>
                    <D_3042_2>Gate 15</D_3042_2>
                    <D_3042_3>Floor 2</D_3042_3>
                </C_C059>
                <D_3164>Delivery city</D_3164>
                <C_C819>
                    <D_3228>Jutland</D_3228>
                </C_C819>
                <D_3251>9000</D_3251>
                <D_3207>DK</D_3207>
            </S_NAD>
         </G_SG2>
        <G_SG2>
            <S_NAD>
                <D_3035>DP</D_3035>
                <C_C082>
                    <D_3039>579000436070</D_3039>
```

```
            <D_1131>0088</D_1131>
        </C_C082>
        <C_C080>
            <D_3036>Logistic service ltd</D_3036>
        </C_C080>
        <C_C059>
            <D_3042>Delivery street 2</D_3042>
            <D_3042_2>Gate 30</D_3042_2>
            <D_3042_3>Floor 1</D_3042_3>
        </C_C059>
        <D_3164>Delivery city 2</D_3164>
        <C_C819>
            <D_3228>Jutland 2</D_3228>
        </C_C819>
        <D_3251>9001</D_3251>
        <D_3207>DK</D_3207>
    </S_NAD>
</G_SG2>
```

7.2 The delivery and order data at the level of the invoice line item

This method is recommended, especially when the invoice includes multiple deliveries and/or orders to different locations, since it enables the connection between the location, the order number and the delivery number.

A delivery note is indicated on each line item. The delivery number is written in BT-16 but within the <G_SG30> segment.

Example of a delivery note at the level of line item:

```
<G_SG30>
    <S_RFF>
        <C_C506>
            <D_1153>AAK</D_1153>
            <D_1154>5433</D_1154>
        </C_C506>
    </S_RFF>
<!--delivery note date-->
<S_DTM>
    <C_C507>
        <D_2005>171</D_2005>
        <D_2380>2018-03-10</D_2380>
    </C_C507>
</S_DTM>
<!--delivery date-->
<S_DTM>
    <C_C507>
        <D_2005>35</D_2005>
        <D_2380>2018-03-10</D_2380>
    </C_C507>
</S_DTM>

</G_SG30>
```

The order number is indicated on each line item. The order number is written in BT-13 but within the <G_SG30> segment.

Example of a order at the level of line item:

```
<G_SG30>
    <S_RFF>
        <C_C506>
            <D_1153>ON</D_1153>
            <D_1154>541133</D_1154>
        </C_C506>
```

```
            </S_RFF>
          <!--order date-->

          <S_DTM>
        <C_C507>
                <D_2005>171</D_2005>
                <D_2380>2018-03-12</D_2380>
        </C_C507>
      </S_DTM>
    </G_SG30>
```

The delivery location is indicated on each line item. The delivery location is written in BT-15 (Deliver to address) but within the <G_SG35> segment.

Example of a delivery loaction at the level of line item:

```
          <G_SG35>
            <S_NAD>
                <D_3035>DP</D_3035>
                <C_C082>
                    <D_3039>579000436070</D_3039>
                    <D_1131>0088</D_1131>
                </C_C082>
                <C_C080>
                    <D_3036>Logistic service ltd</D_3036>
                </C_C080>
                <C_C059>
                    <D_3042>Delivery street 2</D_3042>
                    <D_3042_2>Gate 30</D_3042_2>
                    <D_3042_3>Floor 1</D_3042_3>
                </C_C059>
                <D_3164>Delivery city 2</D_3164>
                <C_C819>
                    <D_3228>Jutland 2</D_3228>
                </C_C819>
                <D_3251>9001</D_3251>
                <D_3207>DK</D_3207>
            </S_NAD>
        </G_SG35>
```

Annex A
(informative)

Business terms (BT)

A.1 List and description of business terms (BT) and business terms groups (BG)

The table contains a list and description of business terms and e-SLOG 2.0 XPaths.

ID	Business term	Description of business term	e-SLOG 2.0 XPath
BT-1	Invoice number	A unique identification of the Invoice.	/Invoice/M_INVOIC/S_BGM/C_C106/D_1004
BT-2	Invoice issue date	The date when the Invoice was issued.	/Invoice/M_INVOIC/S_DTM[C_C507/D_2005='137']/C_C507/D_2380
BT-3	Invoice type code	A code specifying the functional type of the Invoice.	/Invoice/M_INVOIC/S_BGM/C_C002/D_1001
BT-5	Invoice currency code	The currency in which all Invoice amounts are given, except for the Total VAT amount in accounting currency.	/Invoice/M_INVOIC/G_SG7[S_CUX/C_C504/D_6347='2']/S_CUX/C_C504/D_6345
BT-6	VAT accounting currency code	The currency used for VAT accounting and reporting purposes as accepted or required in the country of the Seller.	/Invoice/M_INVOIC/G_SG7[S_CUX/C_C504/D_6347='6']/S_CUX/C_C504/D_6345
BT-7	Value added tax point date	The date when the VAT becomes accountable for the Seller and for the Buyer in so far as that date can be determined and differs from the date of issue of the invoice, according to the VAT directive…	/Invoice/M_INVOIC/S_DTM[C_C507/D_2005='131']/C_C507/D_2380
BT-8	Value added tax point date code	The code of the date when the VAT becomes accountable for the Seller and for the Buyer.	/Invoice/M_INVOIC/S_DTM[C_C507/D_2005='3' or C_C507/D_2005='35' or C_C507/D_2005='432']/C_C507/D_2005
BT-9	Payment due date	The date when the payment is due.	/Invoice/M_INVOIC/G_SG8[S_PAT/D_4279='1']/S_DTM[C_C507/D_2005='13']/C_C507/D_2380

ID	Business term	Description of business term	e-SLOG 2.0 XPath
BT-10	Buyer reference	An identifier assigned by the Buyer used for internal routing purposes.	/Invoice/M_INVOIC/G_SG2[S_NAD/D_3035='BY']/G_SG3[S_RFF/C_C506/D_1153='CR']/S_RFF/C_C506/D_1154
BT-11	Project reference	The identification of the project the invoice refers to.	/Invoice/M_INVOIC/G_SG1[S_RFF/C_C506/D_1153='AEP']/S_RFF/C_C506/D_1154
BT-12	Contract reference	The identification of a contract.	/Invoice/M_INVOIC/G_SG1[S_RFF/C_C506/D_1153='CT']/S_RFF/C_C506/D_1154
BT-13	Purchase order reference	An identifier of a referenced purchase order, issued by the Buyer.	/Invoice/M_INVOIC/G_SG1[S_RFF/C_C506/D_1153='ON']/S_RFF/C_C506/D_1154
BT-14	Sales order reference	An identifier of a referenced sales order, issued by the Seller.	/Invoice/M_INVOIC/G_SG1[S_RFF/C_C506/D_1153='VN']/S_RFF/C_C506/D_1154
BT-15	Receiving advice reference	An identifier of a referenced receiving advice.	/Invoice/M_INVOIC/G_SG1[S_RFF/C_C506/D_1153='ALO']/S_RFF/C_C506/D_1154
BT-16	Despatch advice reference	An identifier of a referenced despatch advice.	/Invoice/M_INVOIC/G_SG1[S_RFF/C_C506/D_1153='AAK']/S_RFF/C_C506/D_1154
BT-17	Tender or lot reference	The identification of the call for tender or lot the invoice relates to.	/Invoice/M_INVOIC/G_SG1[S_RFF/C_C506/D_1153='GC']/S_RFF/C_C506/D_1154
BT-18	Invoiced object identifier	The identification of the call for tender or lot the invoice relates to.	/Invoice/M_INVOIC/G_SG1[S_RFF/C_C506/D_1153='ATS']/S_RFF/C_C506/D_1154
BT-18-1	Scheme identifier	The identification scheme identifier of the Invoiced object identifier.	/Invoice/M_INVOIC/G_SG1/S_RFF/C_C506/D_1153='ATS'
BT-19	Buyer accounting reference	A textual value that specifies where to book the relevant data into the Buyer's financial accounts.	/Invoice/M_INVOIC/G_SG2[S_NAD/D_3035='BY']/G_SG3[S_RFF/C_C506/D_1153='AOU']/S_RFF/C_C506/D_1154
BT-20	Payment terms	A textual description of the payment terms that apply to the amount due for payment (Including description of possible penalties).	/Invoice/M_INVOIC/S_FTX[D_4451='AAB']/C_C108/D_4440
BG-1	INVOICE NOTE	A group of business terms providing textual notes that are relevant for the invoice, together with an indication of the note subject.	

ID	Business term	Description of business term	e-SLOG 2.0 XPath
BT-21	Invoice note subject code	The subject of the following textual note.	/Invoice/M_INVOIC/S_FTX/D_4451='GEN'
BT-22	Invoice note	A textual note that gives unstructured information that is relevant to the Invoice as a whole.	/Invoice/M_INVOIC/S_FTX[D_4451='GEN']/C_C108/D_4440
BG-2	PROCESS CONTROL	A group of business terms providing information on the business process and rules applicable to the	
BT-23	Business process type	Identifies the business process context in which the transaction appears, to enable the Buyer to process the Invoice in an appropriate way.	/Invoice/M_INVOIC/S_FTX[D_4451='DOC']/C_C107/D_4441
BT-24	Specification identifier	An identification of the specification containing the total set of rules regarding semantic content, cardinalities and business rules to which the data contained in the instance document conforms.	/Invoice/M_INVOIC/S_FTX[D_4451='DOC']/C_C108/D_4440
BG-3	PRECEDING INVOICE REFERENCE	A group of business terms providing information on one or more preceding Invoices.	
BT-25	Preceding Invoice number	The identification of an Invoice that was previously sent by the Seller.	/Invoice/M_INVOIC/G_SG1[S_RFF/C_C506/D_1153='OI']/S_RFF/C_C506/D_1154
BT-26	Preceding Invoice issue date	The date when the Preceding Invoice was issued.	/Invoice/M_INVOIC/G_SG1[S_RFF/C_C506/D_1153='OI']/S_DTM[C_C507/D_2005='384']/C_C507/D_2380
BG-5	SELLER	A group of business terms providing information about the Seller.	
BT-27	Seller name	The full formal name by which the Seller is registered in the national registry of legal entities or as a Taxable person or otherwise trades as a person or persons.	/Invoice/M_INVOIC/G_SG2[S_NAD/D_3035='SE']/S_NAD/C_C080/D_3036

ID	Business term	Description of business term	e-SLOG 2.0 XPath
BT-28	Seller trading name	A name by which the Seller is known, other than Seller name (also known as Business name).	/Invoice/M_INVOIC/G_SG2[S_NAD/D_3035='SE']/S_NAD/C_C080/D_3036_2
BT-29	Seller identifier	An identification of the Seller.	/Invoice/M_INVOIC/G_SG2[S_NAD/D_3035='SE']/S_NAD/C_C082/D_3039
BT-29-1	Seller identifier identification scheme identifier	The identification scheme identifier of the Seller identifier.	/Invoice/M_INVOIC/G_SG2[S_NAD/D_3035='SE']/S_NAD/C_C082/D_1131
BT-30	Seller legal registration identifier	An identifier issued by an official registrar that identifies the Seller as a legal entity or person.	/Invoice/M_INVOIC/G_SG2[S_NAD/D_3035='SE']/G_SG3[S_RFF/C_C506/D_1153='GN']/S_RFF/C_C506/D_1154
BT-30-1	Seller legal registration identifier identification scheme identifier	The identification scheme identifier of the Seller legal registration identifier.	/Invoice/M_INVOIC/G_SG2[S_NAD/D_3035='SE']/G_SG3/S_RFF/C_C506/D_1153='GN'
BT-31	Seller VAT identifier	The Seller's VAT identifier (also known as Seller VAT identification number).	/Invoice/M_INVOIC/G_SG2[S_NAD/D_3035='SE']/G_SG3[S_RFF/C_C506/D_1153='VA']/S_RFF/C_C506/D_1154
BT-32	Seller tax registration identifier	The local identification (defined by the Seller’s address) of the Seller for tax purposes or a reference that enables the Seller to state his registered tax status.	/Invoice/M_INVOIC/G_SG2[S_NAD/D_3035='SE']/G_SG3[S_RFF/C_C506/D_1153='AHP']/S_RFF/C_C506/D_1154
BT-33	Seller additional legal information	Additional legal information relevant for the Seller.	/Invoice/M_INVOIC/S_FTX[D_4451='REG']/C_C108/D_4440
BT-34	Seller electronic address	Identifies the Seller's electronic address to which a business document may be delivered.	/Invoice/M_INVOIC/G_SG2[S_NAD/D_3035='SE']/G_SG5[S_CTA/D_3139='IC']/S_COM[C_C076/D_3155='EM']/C_C076/D_3148
BT-34-1	Seller electronic address identification scheme identifier	The identification scheme identifier of the Seller electronic address	/Invoice/M_INVOIC/G_SG2[S_NAD/D_3035='SE']/G_SG5[S_CTA/D_3139='IC']/S_COM/C_C076/D_3155='EM'
BG-5	SELLER POSTAL ADDRESS	A group of business terms providing information about the address of the Seller.	
BT-35	Seller address line 1	The main address line in an address.	/Invoice/M_INVOIC/G_SG2[S_NAD/D_3035='SE']/S_NAD/C_C059/D_3042

ID	Business term	Description of business term	e-SLOG 2.0 XPath
BT-36	Seller address line 2	An additional address line in an address that can be used to give further details supplementing the main line.	/Invoice/M_INVOIC/G_SG2[S_NAD/D_3035='SE']/S_NAD/C_C059/D_3042_2
BT-162	Seller address line 3	An additional address line in an address that can be used to give further details supplementing the main line.	/Invoice/M_INVOIC/G_SG2[S_NAD/D_3035='SE']/S_NAD/C_C059/D_3042_3
BT-37	Seller city	The common name of the city, town or village, where the Seller address is located.	/Invoice/M_INVOIC/G_SG2[S_NAD/D_3035='SE']/S_NAD/D_3164
BT-38	Seller post code	The identifier for an addressable group of properties according to the relevant postal service.	/Invoice/M_INVOIC/G_SG2[S_NAD/D_3035='SE']/S_NAD/D_3251
BT-39	Seller country subdivision	The subdivision of a country.	/Invoice/M_INVOIC/G_SG2[S_NAD/D_3035='SE']/S_NAD/C_C819/D_3228
BT-40	Seller country code	A code that identifies the country.	/Invoice/M_INVOIC/G_SG2[S_NAD/D_3035='SE']/S_NAD/D_3207
BG-6	SELLER CONTACT	A group of business terms providing contact information about the Seller.s	
BT-41	Seller contact point	A contact point for a legal entity or person.	/Invoice/M_INVOIC/G_SG2[S_NAD/D_3035='SE']/G_SG5[S_CTA/D_3139='SU']/S_CTA/C_C056/D_3412
BT-42	Seller contact telephone number	A phone number for the contact point.	/Invoice/M_INVOIC/G_SG2[S_NAD/D_3035='SE']/G_SG5[S_CTA/D_3139='SU']/S_COM[C_C076/D_3155='TE']/C_C076/D_3148
BT-43	Seller contact email address	An e-mail address for the contact point.	/Invoice/M_INVOIC/G_SG2[S_NAD/D_3035='SE']/G_SG5[S_CTA/D_3139='SU']/S_COM[C_C076/D_3155='EM']/C_C076/D_3148
BG-7	BUYER	A group of business terms providing information about the Buyer.	
BT-44	Buyer name	The full name of the Buyer.	/Invoice/M_INVOIC/G_SG2[S_NAD/D_3035='BY']/S_NAD/C_C080/D_3036
BT-45	Buyer trading name	A name by which the Buyer is known, other than Buyer name (also known as Business name).	/Invoice/M_INVOIC/G_SG2[S_NAD/D_3035='BY']/S_NAD/C_C080/D_3036_2
BT-46	Buyer identifier	An identifier of the Buyer.	/Invoice/M_INVOIC/G_SG2[S_NAD/D_3035='BY']/S_NAD/C_C082/D_3039

ID	Business term	Description of business term	e-SLOG 2.0 XPath
BT-46-1	Buyer identifier identification scheme identifier	The identification scheme identifier of the Buyer identifier.	/Invoice/M_INVOIC/G_SG2[S_NAD/D_3035='BY']/S_NAD/C_C082/D_1131
BT-47	Buyer legal registration identifier	An identifier issued by an official registrar that identifies the Buyer as a legal entity or person.	/Invoice/M_INVOIC/G_SG2[S_NAD/D_3035='BY']/G_SG3[S_RFF/C_C506/D_1153='GN']/S_RFF/C_C506/D_1154
BT-47-1	Buyer legal registration identifier identification scheme identifier	The identification scheme identifier of the Buyer legal registration identifier.	/Invoice/M_INVOIC/G_SG2[S_NAD/D_3035='BY']/G_SG3/S_RFF/C_C506/D_1153='GN'
BT-48	Buyer VAT identifier	The Buyer's VAT identifier (also known as Buyer VAT identification number).	/Invoice/M_INVOIC/G_SG2[S_NAD/D_3035='BY']/G_SG3[S_RFF/C_C506/D_1153='VA']/S_RFF/C_C506/D_1154
BT-49	Buyer electronic address	Identifies the Buyer's electronic address to which a business document should be delivered.	/Invoice/M_INVOIC/G_SG2[S_NAD/D_3035='BY']/G_SG5[S_CTA/D_3139='IC']/S_COM[C_C076/D_3155='EM']/C_C076/D_3148
BT-49-1	Buyer electronic address identification scheme identifier	The identification scheme identifier of the Buyer electronic address.	/Invoice/M_INVOIC/G_SG2[S_NAD/D_3035='BY']/G_SG5[S_CTA/D_3139='IC']/S_COM/C_C076/D_3155='EM'
BG-8	BUYER POSTAL ADDRESS	A group of business terms providing information about the postal address for the Buyer.	
BT-50	Buyer address line 1	The main address line in an address.	/Invoice/M_INVOIC/G_SG2[S_NAD/D_3035='BY']/S_NAD/C_C059/D_3042
BT-51	Buyer address line 2	An additional address line in an address that can be used to give further details supplementing the main line.	/Invoice/M_INVOIC/G_SG2[S_NAD/D_3035='BY']/S_NAD/C_C059/D_3042_2
BT-163	Buyer address line 3	An additional address line in an address that can be used to give further details supplementing the main line.	/Invoice/M_INVOIC/G_SG2[S_NAD/D_3035='BY']/S_NAD/C_C059/D_3042_3
BT-52	Buyer city	The common name of the city, town or village, where the Buyer's address is located.	/Invoice/M_INVOIC/G_SG2[S_NAD/D_3035='BY']/S_NAD/D_3164

ID	Business term	Description of business term	e-SLOG 2.0 XPath
BT-53	Buyer post code	The identifier for an addressable group of properties according to the relevant postal service.	/Invoice/M_INVOIC/G_SG2[S_NAD/D_3035='BY']/S_NAD/D_3251
BT-54	Buyer country subdivision	The subdivision of a country.	/Invoice/M_INVOIC/G_SG2[S_NAD/D_3035='BY']/S_NAD/C_C819/D_3228
BT-55	Buyer country code	A code that identifies the country.	/Invoice/M_INVOIC/G_SG2[S_NAD/D_3035='BY']/S_NAD/D_3207
BG-9	BUYER CONTACT	A group of business terms providing contact information relevant for the Buyer.	
BT-56	Buyer contact point	A contact point for a legal entity or person.	/Invoice/M_INVOIC/G_SG2[S_NAD/D_3035='BY']/G_SG5[S_CTA/D_3139='PD']/S_CTA/C_C056/D_3413
BT-57	Buyer contact telephone number	A phone number for the contact point.	/Invoice/M_INVOIC/G_SG2[S_NAD/D_3035='BY']/G_SG5[S_CTA/D_3139='PD']/S_COM[C_C076/D_3155='TE']/C_C076/D_3148
BT-58	Buyer contact email address	An e-mail address for the contact point.	/Invoice/M_INVOIC/G_SG2[S_NAD/D_3035='BY']/G_SG5[S_CTA/D_3139='PD']/S_COM[C_C076/D_3155='EM']/C_C076/D_3148
BG-10	PAYEE	A group of business terms providing information about the Payee, i.e. the role that receives the payment.	
BT-59	Payee name	The name of the Payee.	/Invoice/M_INVOIC/G_SG2[S_NAD/D_3035='PE']/S_NAD/C_C080/D_3036
BT-60	Payee identifier	An identifier for the Payee.	/Invoice/M_INVOIC/G_SG2[S_NAD/D_3035='PE']/S_NAD/C_C082/D_3039
BT-60-1	Payee identifier identification scheme identifier	The identification scheme identifier of the Payee identifier.	/Invoice/M_INVOIC/G_SG2[S_NAD/D_3035='PE']/S_NAD/C_C082/D_1131
BT-61	Payee legal registration identifier	An identifier issued by an official registrar that identifies the Payee as a legal entity or person.	/Invoice/M_INVOIC/G_SG2[S_NAD/D_3035='PE']/G_SG3[S_RFF/C_C506/D_1153='GN']/S_RFF/C_C506/D_1154
BT-61-1	Payee legal registration identifier identification scheme identifier	The identification scheme identifier of the Payee legal registration identifier.	/Invoice/M_INVOIC/G_SG2[S_NAD/D_3035='PE']/G_SG3/S_RFF/C_C506/D_1153='GN'
BG-11	SELLER TAX REPRESENTATIVE PARTY	A group of business terms providing information about the Seller's tax representative.	

ID	Business term	Description of business term	e-SLOG 2.0 XPath
BT-62	Seller tax representative name	The full name of the Seller's tax representative party.	/Invoice/M_INVOIC/G_SG2[S_NAD/D_3035='LC']/S_NAD/C_C080/D_3036
BT-63	Seller tax representative VAT identifier	The VAT identifier of the Seller's tax representative party.	/Invoice/M_INVOIC/G_SG2[S_NAD/D_3035='LC']/G_SG3[S_RFF/C_C506/D_1153='VA']/S_RFF/C_C506/D_1154
BG-12	SELLER TAX REPRESENTATIVE POSTAL ADDRESS	A group of business terms providing information about the postal address for the tax representative party.	
BT-64	Tax representative address line 1	The main address line in an address.	/Invoice/M_INVOIC/G_SG2[S_NAD/D_3035='LC']/S_NAD/C_C059/D_3042
BT-65	Tax representative address line 2	An additional address line in an address that can be used to give further details supplementing the main line.	/Invoice/M_INVOIC/G_SG2[S_NAD/D_3035='LC']/S_NAD/C_C059/D_3042_2
BT-164	Tax representative address line 3	An additional address line in an address that can be used to give further details supplementing the main line.	/Invoice/M_INVOIC/G_SG2[S_NAD/D_3035='LC']/S_NAD/C_C059/D_3042_3
BT-66	Tax representative city	The common name of the city, town or village, where the tax representative address is located.	/Invoice/M_INVOIC/G_SG2[S_NAD/D_3035='LC']/S_NAD/D_3164
BT-67	Tax representative post code	The identifier for an addressable group of properties according to the relevant postal service.	/Invoice/M_INVOIC/G_SG2[S_NAD/D_3035='LC']/S_NAD/D_3251
BT-68	Tax representative country subdivision	The subdivision of a country.	/Invoice/M_INVOIC/G_SG2[S_NAD/D_3035='LC']/S_NAD/C_C819/D_3228
BT-69	Tax representative country code	A code that identifies the country.	/Invoice/M_INVOIC/G_SG2[S_NAD/D_3035='LC']/S_NAD/D_3207
BG-13	DELIVERY INFORMATION	A group of business terms providing information about where and when the goods and services invoiced are delivered.	
BT-70	Deliver to party name	The name of the party to which the goods and services are delivered.	/Invoice/M_INVOIC/G_SG2[S_NAD/D_3035='DP']/S_NAD/C_C080/D_3036

ID	Business term	Description of business term	e-SLOG 2.0 XPath
BT-71	Deliver to location identifier	An identifier for the location at which the goods and services are delivered.	/Invoice/M_INVOIC/G_SG2[S_NAD/D_3035='DP']/S_NAD/C_C082/D_3039
BT-71-1	Deliver to location identifier identification scheme identifier	The identification scheme identifier of the Deliver to location identifier.	/Invoice/M_INVOIC/G_SG2[S_NAD/D_3035='DP']/S_NAD/C_C082/D_1131
BT-72	Actual delivery date	The date on which the delivery is made.	/Invoice/M_INVOIC/S_DTM[C_C507/D_2005='35']/C_C507/D_2380
BG-14	DELIVERY OR INVOICE PERIOD	A group of business terms providing information on the invoice period.	
BT-73	Invoicing period start date	The date when the Invoice period starts.	/Invoice/M_INVOIC/S_DTM[C_C507/D_2005='167']/C_C507/D_2380
BT-74	Invoicing period end date	The date when the Invoice period ends.	/Invoice/M_INVOIC/S_DTM[C_C507/D_2005='168']/C_C507/D_2380
BG-15	DELIVER TO ADDRESS	A group of business terms providing information about the address to which goods and services invoiced were or are delivered.	
BT-75	Deliver to address line 1	The main address line in an address.	/Invoice/M_INVOIC/G_SG2[S_NAD/D_3035='DP']/S_NAD/C_C059/D_3042
BT-76	Deliver to address line 2	An additional address line in an address that can be used to give further details supplementing the main line.	/Invoice/M_INVOIC/G_SG2[S_NAD/D_3035='DP']/S_NAD/C_C059/D_3042_2
BT-165	Deliver to address line 3	An additional address line in an address that can be used to give further details supplementing the main line.	/Invoice/M_INVOIC/G_SG2[S_NAD/D_3035='DP']/S_NAD/C_C059/D_3042_3
BT-77	Deliver to city	The common name of the city, town or village, where the deliver to address is located.	/Invoice/M_INVOIC/G_SG2[S_NAD/D_3035='DP']/S_NAD/D_3164
BT-78	Deliver to post code	The identifier for an addressable group of properties according to the relevant postal service.	/Invoice/M_INVOIC/G_SG2[S_NAD/D_3035='DP']/S_NAD/D_3251
BT-79	Deliver to country subdivision	The subdivision of a country.	/Invoice/M_INVOIC/G_SG2[S_NAD/D_3035='DP']/S_NAD/C_C819/D_3228
BT-80	Deliver to country code	A code that identifies the country.	/Invoice/M_INVOIC/G_SG2[S_NAD/D_3035='DP']/S_NAD/D_3207

ID	Business term	Description of business term	e-SLOG 2.0 XPath
BG-16	PAYMENT INSTRUCTIONS	A group of business terms providing information about the payment.	
BT-81	Payment means type code	The means, expressed as code, for how a payment is expected to be or has been settled.	/Invoice/M_INVOIC/G_SG8[S_PAT/D_4279='1']/S_PAI/C_C534/D_4461
BT-82	Payment means text	The means, expressed as text, for how a payment is expected to be or has been settled.	/Invoice/M_INVOIC/S_FTX[D_4451='AAT']/C_C108/D_4440
BT-83	Remittance information	A textual value used to establish a link between the payment and the Invoice, issued by the Seller.	/Invoice/M_INVOIC/G_SG1[S_RFF/C_C506/D_1153='PQ']/S_RFF/C_C506/D_1154
BG-17	CREDIT TRANSFER	A group of business terms to specify credit transfer payments.	
BT-84	Payment account identifier	A unique identifier of the financial payment account, at a payment service provider, to which payment should be made.	/Invoice/M_INVOIC/G_SG2[S_NAD/D_3035='SE']/S_FII[D_3035='RB']/C_C078/D_3194
BT-85	Payment account name	The name of the payment account, at a payment service provider, to which payment should be made.	/Invoice/M_INVOIC/G_SG2[S_NAD/D_3035='SE']/S_FII[D_3035='RB']/C_C078/D_3192
BT-86	Payment service provider identifier	An identifier for the payment service provider where a payment account is located.	/Invoice/M_INVOIC/G_SG2[S_NAD/D_3035='SE']/S_FII[D_3035='RB']/C_C088/D_3433
BG-18	PAYMENT CARD INFORMATION	A group of business terms providing information about card used for payment contemporaneous with invoice issuance.	
BT-87	Payment card primary account number	The Primary Account Number (PAN) of the card used for payment.	/Invoice/M_INVOIC/G_SG2[S_NAD/D_3035='BY']/S_FII[D_3035='PB']/C_C078/D_3194
BT-88	Payment card holder name	The name of the payment card holder.	/Invoice/M_INVOIC/G_SG2[S_NAD/D_3035='BY']/S_FII[D_3035='PB']/C_C078/D_3192

ID	Business term	Description of business term	e-SLOG 2.0 XPath
BG-19	DIRECT DEBIT	A group of business terms to specify a direct debit.	
BT-89	Mandate reference identifier	Unique identifier assigned by the Payee for referencing the direct debit mandate.	/Invoice/M_INVOIC/G_SG2[S_NAD/D_3035='BY']/G_SG3[S_RFF/C_C506/D_1153='AVS']/S_RFF/C_C506/D_1154
BT-90	Bank assigned creditor identifier	Unique banking reference identifier of the Payee or Seller assigned by the Payee or Seller bank.	/Invoice/M_INVOIC/G_SG2[S_NAD/D_3035='BY']/G_SG3[S_RFF/C_C506/D_1153='AII']/S_RFF/C_C506/D_1154
BT-91	Debited account identifier	The account to be debited by the direct debit.	/Invoice/M_INVOIC/G_SG2[S_NAD/D_3035='BY']/S_FII[D_3035='BI']/C_C078/D_3194
BG-20	DOCUMENT LEVEL ALLOWANCES	A group of business terms providing information about allowances applicable to the Invoice as a whole.	
BT-92	Document level allowance amount	The amount of an allowance, without VAT.	/Invoice/M_INVOIC/G_SG16[S_ALC/D_5463='A']/G_SG20[S_MOA/C_C516/D_5025='204']/S_MOA/C_C516/D_5004
BT-93	Document level allowance base amount	The base amount that may be used, in conjunction with the document level allowance percentage, to calculate the document level allowance amount.	/Invoice/M_INVOIC/G_SG16[S_ALC/D_5463='A']/G_SG20[S_MOA/C_C516/D_5025='25']/S_MOA/C_C516/D_5004
BT-94	Document level allowance percentage	The percentage that may be used, in conjunction with the document level allowance base amount, to calculate the document level allowance amount.	/Invoice/M_INVOIC/G_SG16[S_ALC/D_5463='A']/G_SG19[S_PCD/C_C501/D_5245='1']/S_PCD/C_C501/D_5482
BT-95	Document level allowance VAT category code	A coded identification of what VAT category applies to the document level allowance.	/Invoice/M_INVOIC/G_SG16[S_ALC/D_5463='A']/G_SG22[S_TAX/D_5283='7' and S_TAX/C_C241/D_5153='VAT']/S_TAX/D_5305
BT-96	Document level allowance VAT rate	The VAT rate, represented as percentage that applies to the document level allowance.	/Invoice/M_INVOIC/G_SG16[S_ALC/D_5463='A']/G_SG22[S_TAX/D_5283='7' and S_TAX/C_C241/D_5153='VAT']/S_TAX/C_C243/D_5278
BT-97	Document level allowance reason	The reason for the document level allowance, expressed as text.	/Invoice/M_INVOIC/G_SG16[S_ALC/D_5463=‘A’]/S_ALC/C_C552/D_1230

ID	Business term	Description of business term	e-SLOG 2.0 XPath
BT-98	Document level allowance reason code	The reason for the document level allowance, expressed as a code.	/Invoice/M_INVOIC/G_SG16[S_ALC/D_5463='A']/S_ALC/C_C552/D_5189
BG-21	DOCUMENT LEVEL CHARGES	A group of business terms providing information about charges and taxes other than VAT, applicable to the Invoice as a whole.	
BT-99	Document level charge amount	The amount of a charge, without VAT.	/Invoice/M_INVOIC/G_SG16[S_ALC/D_5463='C']/G_SG20[S_MOA/C_C516/D_5025='23']/S_MOA/C_C516/D_5004
BT-100	Document level charge base amount	The base amount that may be used, in conjunction with the document level charge percentage, to calculate the document level charge amount.	/Invoice/M_INVOIC/G_SG16[S_ALC/D_5463='C']/G_SG20[S_MOA/C_C516/D_5025='25']/S_MOA/C_C516/D_5004
BT-101	Document level charge percentage	The percentage that may be used, in conjunction with the document level charge base amount, to calculate the document level charge amount.	/Invoice/M_INVOIC/G_SG16[S_ALC/D_5463='C']/G_SG19[S_PCD/C_C501/D_5245='2']/S_PCD/C_C501/D_5482
BT-102	Document level charge VAT category code	A coded identification of what VAT category applies to the document level charge.	/Invoice/M_INVOIC/G_SG16[S_ALC/D_5463='C']/G_SG22[S_TAX/D_5283='7' and S_TAX/C_C241/D_5153='VAT']/S_TAX/D_5305
BT-103	Document level charge VAT rate	The VAT rate, represented as percentage that applies to the document level charge.	/Invoice/M_INVOIC/G_SG16[S_ALC/D_5463='C']/G_SG22[S_TAX/D_5283='7' and S_TAX/C_C241/D_5153='VAT']/S_TAX/C_C243/D_5278
BT-104	Document level charge reason	The reason for the document level charge, expressed as text.	/Invoice/M_INVOIC/G_SG16[S_ALC/D_5463='C']/S_ALC/C_C552/D_1230
BT-105	Document level charge reason code	The reason for the document level charge, expressed as a code.	/Invoice/M_INVOIC/G_SG16[S_ALC/D_5463='C']/S_ALC/C_C214/D_7161
BG-22	DOCUMENT TOTALS	A group of business terms providing the monetary totals for the Invoice.	
BT-106	Sum of Invoice line net amount	Sum of all Invoice line net amounts in the Invoice.	/Invoice/M_INVOIC/G_SG50[S_MOA/C_C516/D_5025='79']/S_MOA/C_C516/D_5004
BT-107	Sum of allowances on document level	Sum of all allowances on document level in the Invoice.	/Invoice/M_INVOIC/G_SG50[S_MOA/C_C516/D_5025='260']/S_MOA/C_C516/D_5004

ID	Business term	Description of business term	e-SLOG 2.0 XPath
BT-108	Sum of charges on document level	Sum of all charges on document level in the Invoice.	/Invoice/M_INVOIC/G_SG50[S_MOA/C_C516/D_5025='259']/S_MOA/C_C516/D_5004
BT-109	Invoice total amount without VAT	The total amount of the Invoice without VAT.	/Invoice/M_INVOIC/G_SG50[S_MOA/C_C516/D_5025='389']/S_MOA/C_C516/D_5004
BT-110	Invoice total VAT amount	The total VAT amount for the Invoice.	/Invoice/M_INVOIC/G_SG50[S_MOA/C_C516/D_5025='176']/S_MOA/C_C516/D_5004
BT-111	Invoice total VAT amount in accounting currency	The VAT total amount expressed in the accounting currency accepted or required in the country of the Seller.	/Invoice/M_INVOIC/G_SG50[S_MOA/C_C516/D_5025='2']/S_MOA/C_C516/D_5004
BT-112	Invoice total amount with VAT	The total amount of the Invoice with VAT.	/Invoice/M_INVOIC/G_SG50[S_MOA/C_C516/D_5025='388']/S_MOA/C_C516/D_5004
BT-113	Paid amount	The sum of amounts which have been paid in advance.	/Invoice/M_INVOIC/G_SG50[S_MOA/C_C516/D_5025='113']/S_MOA/C_C516/D_5004
BT-114	Rounding amount	The amount to be added to the invoice total to round the amount to be paid.	/Invoice/M_INVOIC/G_SG50[S_MOA/C_C516/D_5025='366']/S_MOA/C_C516/D_5004
BT-115	Amount due for payment	The outstanding amount that is requested to be paid.	/Invoice/M_INVOIC/G_SG50[S_MOA/C_C516/D_5025='9']/S_MOA/C_C516/D_5004
BG-23	VAT BREAKDOWN	A group of business terms providing information about VAT breakdown by different categories, rates and exemption reasons	
BT-116	VAT category taxable amount	Sum of all taxable amounts subject to a specific VAT category code and VAT category rate (if the VAT category rate is applicable).	/Invoice/M_INVOIC/G_SG52[S_TAX/D_5283='7']/S_MOA[C_C516/D_5025='125']/C_C516/D_5004
BT-117	VAT category tax amount	The total VAT amount for a given VAT category.	/Invoice/M_INVOIC/G_SG52[S_TAX/D_5283='7']/S_MOA[C_C516/D_5025='124']/C_C516/D_5004
BT-118	VAT category code	Coded identification of a VAT category.	/Invoice/M_INVOIC/G_SG52[S_TAX/D_5283='7']/S_TAX[C_C241/D_5153='VAT']/D_5305
BT-119	VAT category rate	The VAT rate, represented as percentage that applies for the relevant VAT category.	/Invoice/M_INVOIC/G_SG52[S_TAX/D_5283='7']/S_TAX[C_C241/D_5153='VAT']/C_C243/D_5278

ID	Business term	Description of business term	e-SLOG 2.0 XPath
BT-120	VAT exemption reason text	A textual statement of the reason why the amount is exempted from VAT or why no VAT is being charged	/Invoice/M_INVOIC/S_FTX[D_4451='AGM']/C_C108/D_4440
BT-121	VAT exemption reason code	A coded statement of the reason for why the amount is exempted from VAT.	/Invoice/M_INVOIC/S_FTX[D_4451='AGM']/C_C107/D_4441
BG-25	INVOICE LINE	A group of business terms providing information on individual Invoice lines.	
BT-126	Invoice line identifier	A unique identifier for the individual line within the Invoice.	/Invoice/M_INVOIC/G_SG26/S_LIN/D_1082
BT-127	Invoice line note	A textual note that gives unstructured information that is relevant to the Invoice line.	/Invoice/M_INVOIC/G_SG26/S_FTX[D_4451='ACB']/C_C108/D_4440
BT-128	Invoice line object identifier	An identifier for an object on which the invoice line is based, given by the Seller.	/Invoice/M_INVOIC/G_SG26/G_SG30[S_RFF/C_C506/D_1153='AVE']/S_RFF/C_C506/D_1154
BT-128-1	Invoice line object identifier identification scheme identifier	The identification scheme identifier of the Invoice line object identifier.	/Invoice/M_INVOIC/G_SG26/G_SG30/S_RFF/C_C506/D_1153='AVE'
BT-129	Invoiced quantity	The quantity of items (goods or services) that is charged in the Invoice line.	/Invoice/M_INVOIC/G_SG26/S_QTY[C_C186/D_6063='47']/C_C186/D_6060
BT-130	Invoiced quantity unit of measure	The unit of measure that applies to the invoiced quantity.	/Invoice/M_INVOIC/G_SG26/S_QTY[C_C186/D_6063='47']/C_C186/D_6411
BT-131	Invoice line net amount	The total amount of the Invoice line.	/Invoice/M_INVOIC/G_SG26/G_SG27[S_MOA/C_C516/D_5025='203']/S_MOA/C_C516/D_5004
BT-132	Referenced purchase order line reference	An identifier for a referenced line within a purchase order, issued by the Buyer.	/Invoice/M_INVOIC/G_SG26/G_SG30[S_RFF/C_C506/D_1153='ON']/S_RFF/C_C506/D_1156
BT-133	Invoice line Buyer accounting reference	A textual value that specifies where to book the relevant data into the Buyer's financial accounts.	/Invoice/M_INVOIC/G_SG26/G_SG30[S_RFF/C_C506/D_1153='AWQ']/S_RFF/C_C506/D_1154

ID	Business term	Description of business term	e-SLOG 2.0 XPath
BG-26	INVOICE LINE PERIOD	A group of business terms providing information about the period relevant for the Invoice line.	
BT-134	Invoice line period start date	The date when the Invoice period for this Invoice line starts.	/Invoice/M_INVOIC/G_SG26/S_DTM[C_C507/D_2005='167']/C_C507/D_2380
BT-135	Invoice line period end date	The date when the Invoice period for this Invoice line ends.	/Invoice/M_INVOIC/G_SG26/S_DTM[C_C507/D_2005='168']/C_C507/D_2380
BG-27	INVOICE LINE ALLOWANCES	A group of business terms providing information about allowances applicable to the individual Invoice line.	
BT-136	Invoice line allowance amount	The amount of an allowance, without VAT.	/Invoice/M_INVOIC/G_SG26/G_SG39[S_ALC/D_5463='A']/G_SG42[S_MOA/C_C516/D_5025='204']/S_MOA/C_C516/D_5004
BT-137	Invoice line allowance base amount	The base amount that may be used, in conjunction with the Invoice line allowance percentage, to calculate the Invoice line allowance amount.	/Invoice/M_INVOIC/G_SG26/G_SG39[S_ALC/D_5463='A']/G_SG42[S_MOA/C_C516/D_5025='25']/S_MOA/C_C516/D_5004
BT-138	Invoice line allowance percentage	The percentage that may be used, in conjunction with the Invoice line allowance base amount, to calculate the Invoice line allowance amount.	/Invoice/M_INVOIC/G_SG26/G_SG39[S_ALC/D_5463='A']/G_SG41[S_PCD/C_C501/D_5245='1']/S_PCD/C_C501/D_5482
BT-139	Invoice line allowance reason	The reason for the Invoice line allowance, expressed as text.	/Invoice/M_INVOIC/G_SG26/G_SG39[S_ALC/D_5463='A']/S_ALC/C_C552/D_1230
BT-140	Invoice line allowance reason code	The reason for the Invoice line allowance, expressed as a code.	/Invoice/M_INVOIC/G_SG26/G_SG39[S_ALC/D_5463='A']/S_ALC/C_C552/D_5189
BG-28	INVOICE LINE CHARGES	A group of business terms providing information about charges and taxes other than VAT applicable to the individual Invoice line.	
BT-141	Invoice line charge amount	The amount of a charge, without VAT.	/Invoice/M_INVOIC/G_SG26/G_SG39[S_ALC/D_5463='C']/G_SG42[S_MOA/C_C516/D_5025='23']/S_MOA/C_C516/D_5004
BT-142	Invoice line charge base amount	The base amount that may be used, in conjunction with the Invoice line charge	/Invoice/M_INVOIC/G_SG26/G_SG39[S_ALC/D_5463='C']/G_SG42[S_MOA/C_C516/D_5025='25']/S_MOA/C_C516/D_5004

ID	Business term	Description of business term	e-SLOG 2.0 XPath
		percentage, to calculate the Invoice line charge amount.	
BT-143	Invoice line charge percentage	The percentage that may be used, in conjunction with the Invoice line charge base amount, to calculate the Invoice line charge amount.	/Invoice/M_INVOIC/G_SG26/G_SG39[S_ALC/D_5463='C']/G_SG41[S_PCD/C_C501/D_5245='2']/S_PCD/C_C501/D_5482
BT-144	Invoice line charge reason	The reason for the Invoice line charge, expressed as text.	/Invoice/M_INVOIC/G_SG26/G_SG39[S_ALC/D_5463='C']/S_ALC/C_C552/D_1230
BT-145	Invoice line charge reason code	The reason for the Invoice line charge, expressed as a code.	/Invoice/M_INVOIC/G_SG26/G_SG39[S_ALC/D_5463='C']/S_ALC/C_C552/D_5189
BG-29	PRICE DETAILS	A group of business terms providing information about the price applied for the goods and services invoiced on the Invoice line.	
BT-146	Item net price	The price of an item, exclusive of VAT, after subtracting item price discount.	/Invoice/M_INVOIC/G_SG26/G_SG29[S_PRI/C_C509/D_5125='AAA']/S_PRI/C_C509/D_5118
BT-147	Item price discount	The total discount subtracted from the Item gross price to calculate the Item net price.	/Invoice/M_INVOIC/G_SG26/G_SG39[S_ALC/D_5463='A' and G_SG42/S_MOA/C_C516/D_5025='509']/G_SG42[S_MOA/C_C516/D_5025='509']/S_MOA/C_C516/D_5004
BT-148	Item gross price	The unit price, exclusive of VAT, before subtracting Item price discount.	/Invoice/M_INVOIC/G_SG26/G_SG29[S_PRI/C_C509/D_5125='AAB']/S_PRI/C_C509/D_5118
BT-149	Item price base quantity	The number of item units to which the price applies.	/Invoice/M_INVOIC/G_SG26/G_SG29[S_PRI/C_C509/D_5125='AAA']/S_PRI/C_C509/D_5284 (net price) /Invoice/M_INVOIC/G_SG26/G_SG29[S_PRI/C_C509/D_5125='AAB']/S_PRI/C_C509/D_5284 (gross price)
BT-150	Item price base quantity unit of measure code	The unit of measure that applies to the Item price base quantity.	/Invoice/M_INVOIC/G_SG26/G_SG29[S_PRI/C_C509/D_5125='AAA']/S_PRI/C_C509/D_6411 (net price) /Invoice/M_INVOIC/G_SG26/G_SG29[S_PRI/C_C509/D_5125='AAB']/S_PRI/C_C509/D_6411 (gross price)
BG-30	LINE VAT INFORMATION	A group of business terms providing information about the VAT applicable for	

ID	Business term	Description of business term	e-SLOG 2.0 XPath
		the goods and services invoiced on the Invoice line.	
BT-151	Invoiced item VAT category code	The VAT category code for the invoiced item.	/Invoice/M_INVOIC/G_SG26/G_SG34/S_TAX/D_5305
BT-152	Invoiced item VAT rate	The VAT rate, represented as percentage that applies to the invoiced item.	/Invoice/M_INVOIC/G_SG26/G_SG34[S_TAX/D_5283='7' and S_TAX/C_C241/D_5153='VAT']/S_TAX/C_C243/D_5278
BG-31	ITEM INFORMATION	A group of business terms providing information about the goods and services invoiced.	
BT-153	Item name	A name for an item.	/Invoice/M_INVOIC/G_SG26/S_IMD[D_7077='F']/C_C273/D_7008
BT-154	Item description	A description for an item.	/Invoice/M_INVOIC/G_SG26/S_IMD[D_7077='A']/C_C273/D_7008
BT-155	Item Seller's identifier	An identifier, assigned by the Seller, for the item.	/Invoice/M_INVOIC/G_SG26/S_PIA[D_4347='5']/C_C212[D_7143='SA']/D_7140
BT-156	Item Buyer's identifier	An identifier, assigned by the Buyer, for the item.	/Invoice/M_INVOIC/G_SG26/S_PIA[D_4347='5']/C_C212[D_7143='IN']/D_7140
BT-157	Item standard identifier	An item identifier based on a registered scheme.	/Invoice/M_INVOIC/G_SG26/S_LIN/C_C212/D_7140
BT-157-1	Item standard identifier identification scheme identifier	The identification scheme identifier of the Item standard identifier	/Invoice/M_INVOIC/G_SG26/S_LIN/C_C212/D_7143
BT-158	Item classification identifier	A code for classifying the item by its type or nature.	/Invoice/M_INVOIC/G_SG26/S_PIA[D_4347='1']/C_C212/D_7140
BT-158-1	Item classification identifier identification scheme identifier	The identification scheme identifier of the Item classification identifier	/Invoice/M_INVOIC/G_SG26/S_PIA[D_4347='1']/C_C212/D_7143
BT-158-2	Scheme version identifer	The version of the identification scheme.	
BT-159	Item country of origin	The code identifying the country from which the item originates.	/Invoice/M_INVOIC/G_SG26/S_ALI/D_3239

ID	Business term	Description of business term	e-SLOG 2.0 XPath
BG-32	ITEM ATTRIBUTES	A group of business terms providing information about properties of the goods and services invoiced.	
BT-160	Item attribute name	The name of the attribute or property of the item.	/Invoice/M_INVOIC/G_SG26/S_FTX[D_4451='ACF']/C_C108/D_4440
BT-161	Item attribute value	The value of the attribute or property of the item.	/Invoice/M_INVOIC/G_SG26/S_FTX[D_4451='ACF']/C_C108/D_4440_2
NBG-01	BUSINESS TERMS FOR ADDRESSING PURPOSES	A group of business terms for addressing purposes.	
NBT-010	Receiving bank account identifier - IBAN	A unique identifier of the financial receiving account.	/Invoice/M_INVOIC/G_SG2[S_NAD/D_3035='BY']/S_FII[D_3035='BB']/C_C078/D_3194
NBT-011	Receiving bank account holder name	The name of the bank receiving account holder.	/Invoice/M_INVOIC/G_SG2[S_NAD/D_3035='BY']/S_FII[D_3035='BB']/C_C078/D_3192
NBT-012	Receiving bank identifier - BIC	An identifier for the receiving bank.	/Invoice/M_INVOIC/G_SG2[S_NAD/D_3035='BY']/S_FII[D_3035='BB']/C_C088/D_3433
NBT-013	Buyer tax registration number	DBuyer tax registration number.	/Invoice/M_INVOIC/G_SG2[S_NAD/D_3035='BY']/G_SG3[S_RFF/C_C506/D_1153='AHP']/S_RFF /C_C506/D_1154
NBG-02	FISCAL VERIFICATION	A group of business terms providing information on fiscal verification of invoices.	
NBT-020	Date and time of issuing the invoice	Date and time of issuing the invoice in following format: YYYY-MMDDTHH:MM:SS	/Invoice/M_INVOIC/S_FTX[D_4451='TXD']/C_C108/D_4440
NBT-021	Mark of an individual (operator)	The mark of an individual (operator), who issues the invoice with the usage of the electronic device for issuing invoices.	/Invoice/M_INVOIC/S_FTX[D_4451='TXD']/C_C108/D_4440_1
NBT-022	EOR - Unique identification invoice mark	EOR-Unique identification invoice mark.	/Invoice/M_INVOIC/S_FTX[D_4451='TXD']/C_C108/D_4440_2
NBT-023	ZOI - Protective mark of the invoice issue	ZOI-Protective mark of the invoice issuer.	/Invoice/M_INVOIC/S_FTX[D_4451='TXD']/C_C108/D_4440_3

ID	Business term	Description of business term	e-SLOG 2.0 XPath
NBT-024	Mark for printing QR code, PDF417 code and code 128	Mark for printed code (60 numerical places) consisted of: ZOI, tax number of the person liable, date and time of issuing invoice and control character.	/Invoice/M_INVOIC/S_FTX[D_4451='TXD']/C_C108/D_4440_4
NBG-03	INVOICE LINE NATIONAL EXTENSION	A group of business terms providing information on national extending of individual Invoice lines.	
NBT-031	Invoice line net amount including VAT	The total amount of the Invoice line including VAT.	/Invoice/M_INVOIC/G_SG26/G_SG27[S_MOA/C_C516/D_5025='38']/S_MOA/C_C516/D_5004
NBT-032	Invoice line VAT category taxable amount	Sum of all taxable amounts on line item level.	/Invoice/M_INVOIC/G_SG26/G_SG27[S_MOA/C_C516/D_5025='125']/S_MOA/C_C516/D_5004
NBT-033	Invoice line VAT category tax amount	The total VAT amount on line item level.	/Invoice/M_INVOIC/G_SG26/G_SG27[S_MOA/C_C516/D_5025='124']/S_MOA/C_C516/D_5004
NBG-04	PAYING PROCESS AUTOMATION	A group of business terms providing information for enabling paying process automation.	
NBT-041	Payment method	The payment method of an e-invoice defines how the e-invoice will be paid. One of the following values may be entered in the field: - 0 - The invoice must be paid - 1 - The invoice will be paid through direct debit - 2 - The invoice has already been paid - 3 - other - there is no possibility of payment - 4 - direct payment	/Invoice/M_INVOIC/S_FTX[D_4451='PAI']/C_C108/D_4440
NBT-042	Payment purpose	The payment purpose code. For example: OTHR, COST, ANNI, GDSV ...	/Invoice/M_INVOIC/S_FTX[D_4451='ALQ']/C_C108/D_4440

Annex B
(informative)

e-SLOG 2.0 Schema

B.1 XML Schema

The current e-SLOG 2.0 .XML document schema is available on the link:

http://www.roseslovenia.eu/e_files/news/eSLOG20_INVOIC_v200.xsd.

Annex C
(informative)

Demonstration example of use application

C.1 An example of using segment elements

In Chapter 6, an example of use is given for individual segment elements. An example of use of the e-SLOG 2.0 document, which contains all of the above examples of elements, is available on the link:

http://www.roseslovenia.eu/e_files/news/sample_eSLOG20_INVOIC_v200.xml.

Annex D
(informative)

Mapping table e-SLOG 1.6

D.1 Mapping table between e-SLOG 1.6 and e-SLOG 2.0

The interoperability between e-SLOG 1.6 and e-SLOG 2.0 is supported by mapping tables that translate elements between the two standards.

Mapping table that translate from e-SLOG 1.6 to e-SLOG 2.0, is available on the link:

http://www.roseslovenia.eu/e_files/news/map_eSLOG16_eSLOG20.xlsx.

Mapping table that translate from e-SLOG 2.0 to e-SLOG 1.6, is available on the link:

http://www.roseslovenia.eu/e_files/news/map_eSLOG20_eSLOG16.xlsx.

Literature

[1] Directive 2014/55/EU of the European Parliament and of the Council of 16 April 2014 on electronic invoicing in public procurement. Available at http://eurlex. europa.eu/legal-content/EN/TXT/?uri=CELEX:32014L0055.

[2] SIST EN 16931-1:2017, *Electronic Invoicing - Part 1: Semantic data model of the core elements of an electronic invoice.*

[3] SIST-TS CEN/TS 16931-2:2017, *Electronic Invoicing - Part 2: List of syntaxes that comply with EN 16931-1.*

[4] SIST-TS CEN/TS 16931-3-4:2018, *Electronic invoicing - Part 3-4: Syntax binding for UN/EDIFACT INVOIC D16B.*

[5] EDIFACT INVOIC D01B.

[6] ISO/TS 20625:2002, *Electronic data interchange for administration, commerce and transport (EDIFACT) – Rules for the generation of XML scheme files (XSD) on the basis of EDI(FACT) implementation guidelines.*

[7] W3C XML schema. Available at https://www.w3.org/TR/xmldsig-core/xmldsig-core-schema.xsd.